2023

scheppach

Germany

TOOLS
CATALOGUE

INDEX

WOODWORKING MACHINES

Plunge saws	4 – 8
Cross-cut mitre saw	9
Sliding cross-cut mitre saws	10 – 21
Tool stands	22 – 23
Table top cross-cut mitre saw	24
Circular table saws	25 – 32
Scroll saws	33 – 39
Band saws	40 – 48
Benchtop shaper / router	49 – 50
Planer / thicknesser	51 – 55
Dust extraction systems	56 – 59
Air filter	60
Wood lathes	61 – 63

SHARPENING SYSTEMS

Wet grinding systems	64 – 72
Bench grinders	73 – 78
Combination grinding machine	79
Belt and disc sanders	80 – 82
Oscillating spindle grinding machines	83 – 85
Universal grinding	86 – 89
Drill bit sharpener	90
Wall and ceiling sanders	91 – 99

FIREWOOD

Horizontal log splitters	100– 101
Vertical log splitters	102– 103
Metre log splitter	104 – 111
Rocking log saws	112 – 117

METALWORKING MACHINES

Bench drills	118 – 121
Pillar drills	122 – 123
Cut off saw	124
Metal band saw	125

LIFTING TECHNOLOGY

Chain hoist	126
Cable hoist	127

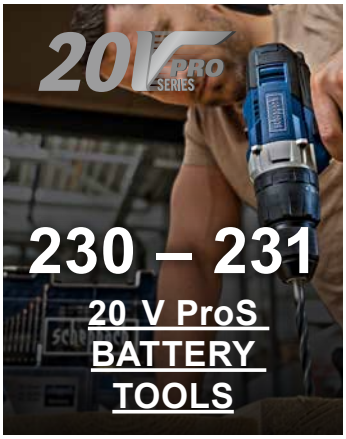

CONSTRUCTION MACHINES

Tile cutting machines	128 – 129
Stone cutting machines	130 – 131
Rotary and demolition hammers	132 – 133
Demolition hammers	134 – 136
Concrete mixer	137 – 139
Plate compactors	140 – 147
Petrol tamper	148
Earth auger	149
Dumper	150 – 152
Paint and mortar stirrers	153 – 155
Airless paint sprayer	156
Power generator	157 – 163
Powerstation	164 – 167

COMPRESSED AIR TECHNOLOGY

Portable compressors	168 – 169
Compressors	170 – 187
Compressed air universal tool	188 – 189

WORKSHOP

Welding machines	190 – 196
Plasma cutter	197
Digital multi welding machine with plasma cutter	198 – 199
Pallet truck	200
Mobile workshops	201 – 209

CLEANING TECHNOLOGY

Sweeper	210
High-pressure cleaners	211 – 216
Wet / dry vacuum cleaners	217 – 224
Ash vacuum cleaner	225

PUMPS

Pond pressure filter sets	226 – 227
Pool sand filter systems	228 – 229

20 V ProS BATTERY TOOLS

Battery + Charger	230
Mobile workshop	231

PL55

selbst ist der Mann
Das Do-it-yourself-Magazin
SELBST AUSPROBIERT
FAZIT: TTTTT
Bewertet mit „GUT"
Ausgabe 8/2012
www.selbst.de

3 IN 1

- Plunge saw
- Hand held circular saw
- Panel sizing saw

360°

SPECIFICATIONS

Dimensions L x W x H	340 x 260 x 235 mm
Blade Ø	160 mm
Arbor Ø	20 mm
Blade speed	5500 rpm
Max. cut 90°	55 mm
Max. cut 45°	41 mm
Bevel capacity	0 – 45°
Close to wall cut	16 mm
Dust collection Ø inner / outer	35 / 38 mm
Motor	230 – 240 V~
Input	1200 W

LOGISTICAL DATA

Weight net / gross	7.4 / 8.2 kg
Packaging dimensions	710 x 260 x 270 mm
Article number	5901802915
Barcode	4046664025665
20 Container	900 pcs
40 Container	1800 pcs
40 HQ Container	2040 pcs

Ideal for edging up to 16 mm from the wall. Another example of PL55's diverse operations.

6" PROFESSIONAL PLUNGE SAW SET

- High-performance **1200 W motor**
- Guide rail allows parallel penetration of the saw blade and uniform guidance of the saw
- Saw blade with 24 teeth guarantees a very clean cross section with minimal breakout for laminate
- Saw blade enclosed by guard ensures efficient extraction of sawdust
- **A cutting depth of 55 mm** allows cutting and adjustment of most door thicknesses
- Suitable for **different materials such as solid wood, work tops, MDF and double coated boards, laminate etc.**
- The PL55 delivers the best cutting results – in the workshop or on the construction site
- Perfect **shadow gaps of 16 mm**
- **Includes 2 x 700 mm guide rails, rail connector and tilt protection**

Mitre cuts with stepless angle adjustment from 0° to 45°.

55 mm maximum stepless cutting depth.

Perfect for kitchen worktops. Even an amateur can achieve exact parallel splinter free cuts using the PL55 with the guide track system.

Achieve cuts usually performed on a panel sizing table saw: perfect parallel and trim cuts.

PL55 ideal whatever the material: • solid natural timbers • chipboard • plywood • even MDF and double coated boards …

Optional accessories can be found on page 8

PL75

selbst ist der Mann
Das Do-it-yourself-Magazin
SELBST AUSPROBIERT
FAZIT: TTTTT
Bewertet mit „GUT"
Ausgabe 11/2015
www.selbst.de

3 IN 1

- Plunge saw
- Hand held circular saw
- Panel sizing saw

SPECIFICATIONS

Dimensions L x W x H	420 x 300 x 235 mm
Blade Ø	210 mm
Arbor Ø	30 mm
Blade speed	4500 rpm
Max. cut 90°	75 mm
Max. cut 45°	55 mm
Bevel capacity	0 – 45°
Distance-to-wall cut	16 mm
Dust collection Ø inner / outer	35 / 38 mm
Motor	230 – 240 V~
Input	1600 W

360°

LOGISTICAL DATA

Weight net / gross	6.9 / 7.6 kg
Packaging dimensions	430 x 240 x 315 mm
Article number	5901804901-901
Barcode	4046664042396
20 Container	810 pcs (670 pcs with 1400 mm rail)
40 Container	1680 pcs (1350 pcs with 1400 mm rail)
40 HQ Container	1920 pcs (1540 pcs with 1400 mm rail)

PL75 is ideal for edging up to 16 mm from the wall. One more diverse operation from this unique saw. Standard attachable splinter guards. Perfect for splinter free cuts on MDF and cabinet grade veneered boards etc.

8" PROFESSIONAL PLUNGE SAW SET

- Powerful, thanks to **1600 W motor**
- Guide rail allows parallel penetration of the saw blade and uniform guidance of the saw
- Saw blade with 24 teeth guarantees a very clean cross section with minimal breakout for laminate
- Efficient extraction of sawdust, thanks to saw blade enclosed by guard
- **A cutting depth of 75 mm** makes cutting and adjustment of most door thicknesses easier
- Suitable for **different materials such as solid wood, work tops, MDF panels coated on both sides, laminate etc.**
- The best cutting results even without guide rail
- Perfect **shadow gaps of 16 mm**
- Precise cuts in worktops, solid wood, laminate and plastic
- Handling and weight distribution recommended by tradesmen
- **Includes 1400 mm guide rail, rail connector and tilt protection**

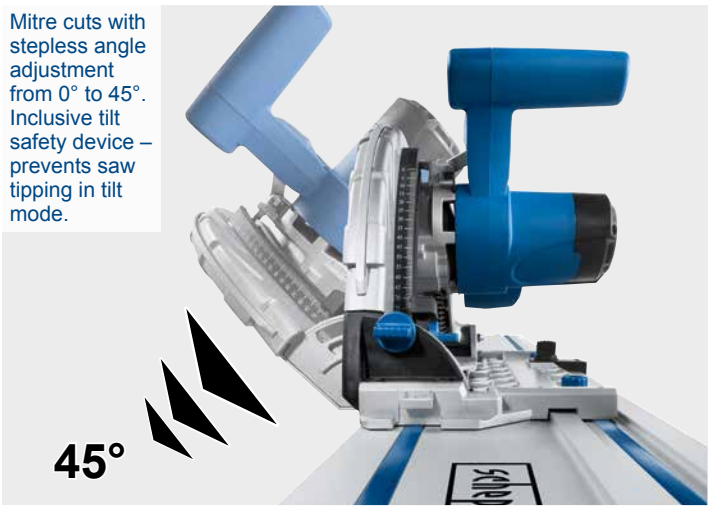

Mitre cuts with stepless angle adjustment from 0° to 45°. Inclusive tilt safety device – prevents saw tipping in tilt mode.

Massive 75 mm depth of cut equal to cutting capacity of many circular saw benches. Perfect parallel cutting every time.

Perfect for kitchen worktops. Only possible with a plunge saw system splinter-free. Even an amateur can achieve exact parallel splinter free cuts using the PL75 with optional guide track system.

PL75 ideal whatever the material:
• solid natural timbers • chipboard • plywood • even MDF and double coated boards …

Splinter-free edges thanks integrated splinter guard.

Optional accessories can be found on page 8

PL75 / PL55

	Description	Article number	Barcode
1 Accessory package	2 x clamping devices 1 x guide track connector 1 x limit stop	3901802702	4046664013990
2 Guide rail	1400 mm	4901802701	4014915075158
3 Saw blades Hard & Softwood, Laminate, Plastic	PL75: Ø 210 x 30 mm / 36 T Ø 210 x 30 mm / 72 T	 7901800601 7901800602	 4046664035725 4046664035732
	PL55: Ø 160 x 20 x 2.4 mm / 24 T Ø 160 x 20 x 2.2 mm / 48 T	 3901802704 3901802705	 4046664014256 4046664014263
4 Anti tip		3901802703	4046664014652

1

2 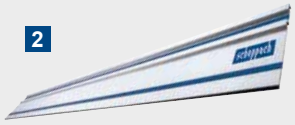

3

4

8" CROSS-CUT MITRE SAW

- Sturdy yet lightweight **aluminium pressure die-cast frame** for easy transport
- High-performance **1500 W motor** for versatile use
- Compact dimensions even for small workshops
- Carbide saw blade with a diameter of 210 mm and 24 teeth
- **Wide cutting width up to 120 mm**
- Saw blade fully enclosed by guard for maximum work safety
- Torsion-resistant construction
- **Precision laser**

360°

LOGISTICAL DATA

Weight net / gross	7.6 / 9 kg
Packaging dimensions	490 x 330 x 340 mm
Article number	3901105915
Barcode	4046664017028
20 Container	500 pcs
40 Container	1040 pcs
40 HQ Container	1200 pcs

SPECIFICATIONS

Dimensions L x W x H	395 x 340 x 468 mm
Blade Ø	210 mm
Motor speed	5000 rpm
Bevel type	1 x 45°
Mitre capacity	45° left / -45° right
Cross cut at 90°	120 x 60 mm
Mitre cut at 45°	80 x 35 mm
Mitre slots	45-30-22.5-15-0-15-22.5-30-45°
Motor	220 – 240 V~
Input	1500 W

Optional accessories can be found on page 20

HM216

INCLUDED

8" SLIDING CROSS-CUT MITRE SAW INCLUDING 2nd SAWBLADE

- Lightweight **die-cast aluminium design** for easy transport
- **Powerful 2000 W** motor provides various cutting applications
- Compact bench top design fits conveniently in small shop environments
- The 24 tooth carbide tipped blade stays sharp and makes clean cuts
- **Built-in laser** provides high visibility for precision cutting
- **Cross cutting width up to 340 mm**
- Fully enclosed blade guard for operator safety
- **Includes 24T and 48T blade**

SPECIFICATIONS

Dimensions L x W x H	735 x 593 x 505 mm
Blade Ø	216 mm
Motor speed	4700 rpm
Turntable Ø	254 mm
Bevel type	1 x 45° left
Mitre capacity	-45° bis +45°
Cross cut at 90°	340 x 65 mm
Mitre cut at 45°	240 x 65 mm
Bevel cut at 45°	340 x 38 mm
Compound cut at 45°	240 x 38 mm
Motor	220 – 240 V~
Input	2000 W

LOGISTICAL DATA

Weight net / gross	12 / 14.6 kg
Packaging dimensions	790 x 460 x 355 mm
Article number	5901215903
Barcode	4046664072560
20 Container	210 pcs
40 Container	450 pcs
40 HQ Container	524 pcs

Optional accessories can be found on page 20

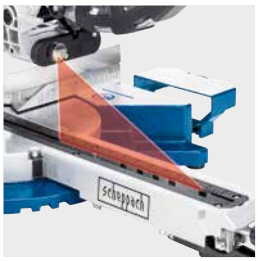

SOFT-START

INCLUDED

SPECIFICATIONS

Dimensions L x W x H	770 x 595 x 590 mm
Blade Ø	255 mm
Motor speed	4500 rpm
Turn table Ø	248 mm
Bevel type	1 x 45° left
Mitre capacity	-45° till +45°
Cross cut at 90°	340 x 90 mm
Mitre cut at 45°	240 x 90 mm
Bevel cut at 45°	340 x 45 mm
Compound cut at 45°	240 x 45 mm
Motor	220 – 240 V~ / 50 Hz
Input	2000 W

LOGISTICAL DATA

Weight net / gross	14.3 / 17.5 kg
Packaging dimensions	815 x 480 x 405 mm
Article number	5901216901
Barcode	4046664069935
20 Container	155 pcs
40 Container	330 pcs
40 HQ Container	408 pcs

10" SLIDING CROSS-CUT MITRE SAW INCLUDING 2nd SAWBLADE

- Lightweight **die cast aluminium design** for easy transport
- **Powerful 2000 W motor** provides various cutting applications
- Compact bench top design fits conveniently in small shop environments
- The **60 teeth carbide tipped blade** stays sharp and makes clean cuts
- Built-in laser provides high visibility for precision cutting
- **Big cross cutting width up to 340 mm**
- Fully enclosed blade guard for operator safety
- **Inclusive 48T and 60T blade**
- **Equipped with a softstart to enable a smooth start**

Optional accessories can be found on page 20

HM216SPX

Rotary disc can be adjusted from +45° to -45°

Saw head can be tilted to the left from 0 to 45°

INCLUDED

8" SLIDING CROSS-CUT MITRE SAW INCLUDING 2ND SAW BLADE

- Stable and lightweight mitre saw with double column guide
- **Powerful 2000 W motor**
- Durable **die-cast aluminium frame**
- **Built-in laser** provides high visibility for precision cutting
- **A large cutting width range up to 340 mm and a cutting height of 65 mm at 90°**
- Fully enclosed saw blade guard for maximum work safety
- Includes a dustbag for a dust-free work area
- **Carbide saw blade with 24 teeth**, ideal for longitudinal cutting of soft wood (pre-assembled)
- **Plus carbide saw blade with 48 teeth** for precise and clean longitudinal and primarily transverse cutting of solid wood
- **Including two laterally adjustable workpiece supports made of aluminium to enlarge the support surface**

SPECIFICATIONS

Dimensions L x W x H	approx. 735 x 705 x 500 mm
Saw blade Ø	210 mm / 24 teeth
Motor speed	4800 rpm
Tilt angle	from 0° to 45°
Mitre angle	from -45° to +45°
Cutting width/height: 90° / 90°	340 x 65 mm
Cutting width/height: 90° / 45°	240 x 65 mm
Cutting width/height: 45° / 90°	340 x 38 mm
Cutting width/height: 45° / 45°	240 x 38 mm
Motor power	2000 W

LOGISTICAL DATA

Weight net / gross	12.15 / 14.5 kg
Packaging dimensions	790 x 460 x 355 mm
Article number	5901221901
EAN	4046664127420
20 Container	228 pcs
40 Container	468 pcs
40 HQ container	546 pcs

Optional accessories can be found on page 20

selbst ist der Mann
Das Do-it-yourself-Magazin
PRAXISTEST
– Kategorie: Heimwerker –
GUT (2,3)
2 Produkte mit GUT
TESTSIEGER
Ausgabe 01/2022
4 Produkte im Test
www.selbst.de

INCLUDED

10" SLIDING CROSS-CUT MITRE SAW INCLUDING 2ND SAW BLADE

- Stable Sliding cross-cut mitre saw with double column guide
- **Powerful 2200 watt engine**
- Durable **die-cast aluminium frame**
- **Carbide saw blade with 48 teeth** for precise and clean longitudinal and primarily transverse cutting of solid wood, **plus a second carbide saw blade with 60 teeth**
- **Built-in laser** provides high visibility for precision cutting
- **A large cutting width range up to 340 mm and a cutting height of 90 mm at 90°**
- Aluminium workpiece supports which can be adjusted on both sides to enlarge the support surface
- Dust bag for a clean working area

SPECIFICATIONS

Dimensions L x W x H	approx. 770 x 705 x 560 mm
Saw blade Ø	254 mm / 48 teeth
Motor speed	4800 rpm
Tilt angle	from 0° to 45°
Mitre angle	from -45° to +45°
Cutting width/height: 90° / 90°	340 x 90 mm
Cutting width/height: 90° / 45°	240 x 90 mm
Cutting width/height: 45° / 90°	340 x 46 mm
Cutting width/height: 45° / 45°	240 x 46 mm
Motor power	2200 W

LOGISTICAL DATA

Weight net / gross	14.4 / 16.4 kg
Packaging dimensions	765 x 460 x 400 mm
Article number	5901222901
Barcode	4046664134282
20 container	180 pcs
40 container	390 pcs
40 HQ container	462 pcs

Optional accessories can be found on page 20

HM140L

12" SLIDING CROSS-CUT MITRE SAW INCLUDING 2ND SAWBLADE

- **Saw head can be angled to either side** for professional results
- **Work table can be adjusted from -45° to +45°**
- Parallel guides with robust linear ball bearings for consistently precise cutting results
- **High stop rail** on the base frame
- Sturdy yet lightweight aluminium pressure die-cast construction
- Easy transport, thanks to low weight (20.5 kg)
- **Built-in laser** for precise cutting along the indicated cutting edge
- **305 mm carbide saw blade** for consistent and precise cutting results
- **High cutting capacity of 330 mm width and 105 mm height**
- Saw blade fully enclosed by guard for maximum work safety
- **Includes carbide saw blade with 24 teeth and 48 teeth**

selbst ist der Mann
Das Do-it-yourself-Magazin
PRAXISTEST
– Kategorie: Profiklasse –
GUT (2,4)
3 Produkte mit gut
Ausgabe 01/2022
3 Produkte im Test
www.selbst.de

INCLUDED

SPECIFICATIONS

Dimensions L x W x H	865 x 535 x 520 mm
Blade Ø	305 mm
Motor speed	3800 rpm
Bevel type	2 x 45°
Mitre capacity	45° left / -45° right
Cross cut at 90° / 90°	330 x 105 mm
Mitre cut at 90° / 45°	330 x 35 mm (right) 330 x 60 mm (left)
Bevel cut at 45° / 90°	330 x 60 mm
Compound cut at 45° / 45°	230 x 35 mm (right) 230 x 60 mm (left)
Mitre slots	45-31,6-22,5-0-22,5-31,6-45°
Motor	220 – 240 V~ / 50 Hz
Input	2000 W

LOGISTICAL DATA

Weight net / gross	20.5 / 25.3 kg
Packaging dimensions	925 x 550 x 525 mm
Article number	5901218901
Barcode	4046664072843
20 Container	95 pcs
40 Container	200 pcs
40 HQ Container	249 pcs

Optional accessories can be found on page 20

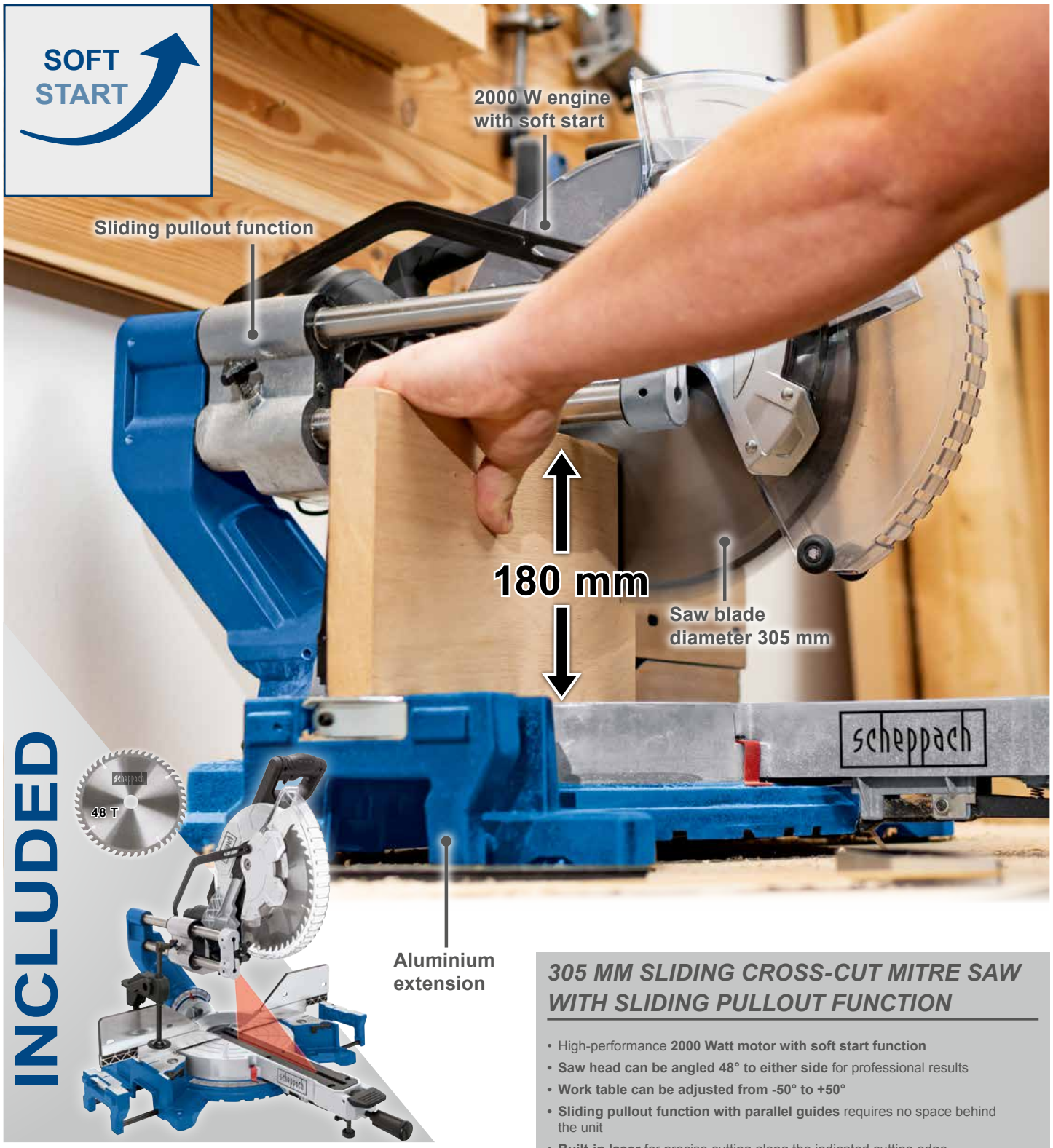

305 MM SLIDING CROSS-CUT MITRE SAW WITH SLIDING PULLOUT FUNCTION

- High-performance **2000 Watt motor with soft start function**
- **Saw head can be angled 48° to either side** for professional results
- **Work table can be adjusted from -50° to +50°**
- **Sliding pullout function with parallel guides** requires no space behind the unit
- **Built-in laser** for precise cutting along the indicated cutting edge
- **305 mm carbide saw blade** for consistent and precise cutting results
- **High cutting capacity of 340 mm width and 180 mm height**, thanks to special cutting height extension
- Saw blade fully enclosed by guard for maximum work safety
- **Includes carbide saw blade with 48 teeth**

SPECIFICATIONS

Dimensions L x W x H	588 x 842 x 746 mm
Blade Ø	305 mm
Motor speed	5000 rpm
Bevel type	2 x 48°
Mitre capacity	-50° left till +50° right
Cross cut at 90° / 90°	340 x 105 mm
Mitre cut at 90° / 45°	340 x 35 mm (r.) 340 x 60 mm (l.)
Bevel cut at 45° / 90°	235 x 105 mm
Compound cut at 45° / 45°	235 x 35 mm (r.) 235 x 60 mm (l.)
Mitre slots	45-31.6-22.5-0-22.5-31.6-45°
Motor	220 – 240 V~ / 50 Hz
Input	2000 W

LOGISTICAL DATA

Weight net / gross	20.9 / 24.6 kg
Packaging dimensions	750 x 585 x 390 mm
Article number	5901223901
Barcode	4046664161035
20 Container	162 pcs
40 Container	360 pcs
40 HQ Container	360 pcs

Optional accessories can be found on page 20

HM90MP

8" MULTI-PURPOSE SLIDING CROSS-CUT MITRE SAW

- **2 cutting speeds** for optimum setting to a wide range of materials
- **Multifunction saw blade diameter 216 mm with 24 teeth**
- **Cutting performance of 340 x 65 mm**
- Screw clamp system for a stable grip of the workpiece during all mitre, chop and cross cuts
- High workpiece stop made from pressure **die-cast aluminium** for optimum positioning and sawing
- **Two pull-out workpiece supports** made from pressure die-cast aluminium with **integrated and fold-out workpiece stop**
- Durable **saw blade guard made from pressure die-cast aluminium**
- Including laser for precisely marking the cutting edge
- **Precise cuts due to stable double column guide**
- Including carrying handle on the rear for easy transport

Chop, pull and miter saw HM90MP with a multifunctional saw blade

Upper Class 1,4
Fußböden und Wände
Heimwerker Praxis 2021
Value for money: good – very good

Advantages of a MULTI FUNCTION SAWBLADE

- One saw blade
- Two speeds
- Unlimited possibilities

360°

SPECIFICATIONS

Dimensions L x W x H	790 x 460 x 355 mm
Saw blade Ø	216 mm
Motor speed	3200 / 4500 rpm
Turntable Ø	260 mm
Tilt angle	1 x 45°
Mitre angle	47° left to -47° right
Cutting width/height: 90° / 90°	340 x 65 mm
Cutting width/height: 90° / 45°	340 x 38 mm
Cutting width/height: 45° / 90°	240 x 65 mm
Cutting width/height: 45° / 45°	240 x 38 mm
Engine	220 – 240 V~
Engine output	2000 W

LOGISTICAL DATA

Weight net / gross	12.2 / 14.5 kg
Packaging dimensions	800 x 480 x 345 mm
Article number	5901219901
Barcode	4046664092346
20 Container	198 pcs
40 Container	402 pcs
40 HQ Container	469 pcs

PRODUCT DETAILS

2 speeds

Soft start

Laser

Can be operated from either side

Cutting width
340 mm

Cutting height
65 mm

Motor speed
3200 / 4500 rpm

Multifunction sawblade

2 CUTTING SPEEDS
FOR DIFFERENT MATERIALS

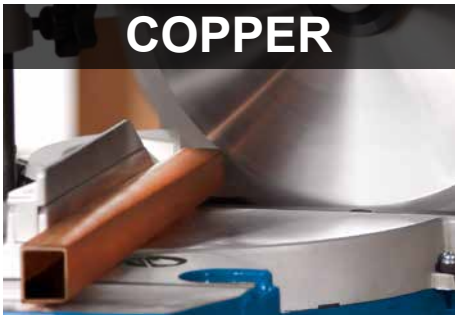

Optional accessories can be found on page 20

HM110MP

10" MULTI-PURPOSE SLIDING CROSS-CUT MITRE SAW

- **2 cutting speeds** for optimum setting to a wide range of materials
- **Multifunction saw blade 254 mm Ø with 28 teeth**
- **High cutting performance of 340 x 90 mm**
- Screw clamp system for a stable grip of the workpiece during all mitre, chop and cross cuts
- High workpiece stop made from pressure die-cast aluminium for optimum positioning and sawing
- **2 pull-out workpiece supports made from pressure die-cast aluminium with fold-out workpiece stop**
- **Durable saw blade guard** made from pressure die-cast aluminium
- Including laser for precisely marking the cutting edge
- **Precise cuts due to stable double column guide**
- Including carrying handle on the rear for easy transport

Advantages of a MULTI FUNCTION SAWBLADE

- One saw blade
- Two speeds
- Unlimited possibilities

360°

Kappzugsägen: Scheppach HM110MP
WORLD TOOL AWARDS
WINNER
PREMIUM
2021

SPECIFICATIONS

Dimensions L x W x H	813 x 593 x 342 mm
Saw blade Ø	254 mm
Motor speed	3200 / 4500 rpm
Turntable Ø	254 mm
Tilt angle	1 x 45°
Mitre angle	45° left to -45° right
Cutting width/height: 90° / 90°	340 x 90 mm
Cutting width/height: 90° / 45°	240 x 90 mm
Cutting width/height: 45° / 90°	340 x 45 mm
Cutting width/height: 45° / 45°	240 x 45 mm
Motor	220 – 240 V~ / 50 Hz
Input	2000 W

LOGISTICAL DATA

Weight net / gross	13.6 / 16.7 kg
Packaging dimensions	850 x 505 x 380 mm
Article number	5901220901
Barcode	4046664092353
20 Container	180 pcs
40 Container	395 pcs
40 HQ Container	460 pcs

PRODUCT DETAILS

2 speeds

Soft start

Laser

Can be operated from either side

Cutting width

Cutting height

Motor speed 3200 / 4500 rpm

Multifunction sawblade

2 CUTTING SPEEDS
FOR DIFFERENT MATERIALS

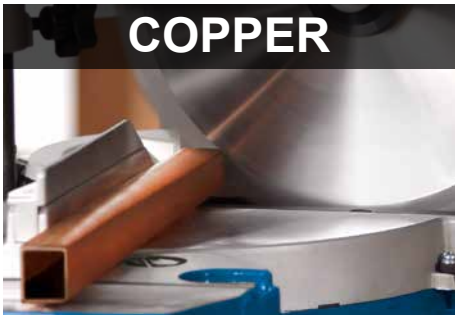

Optional accessories can be found on page 20

HM216

	Description	Article number	Barcode
1 Saw blade Hard & Softwood, Laminate	Ø 216 x 30 x 2.8 mm / 24 T	7901101602	4046664072737
2 Saw blade Hard & Softwood, Laminate	Ø 216 x 30 x 2.8 mm / 40 T	7901200701	4014915088806
3 Saw blade Hard & Softwood, Laminate	Ø 216 x 30 x 2.8 mm / 48 T	7901200705	4046664031642

HM254

	Description	Article number	Barcode
1 Saw blade Hard & Softwood, Laminate	Ø 216 x 30 x 2.8 mm / 48 T	7901200702	401495088813
2 Saw blade Hard & Softwood, Laminate	Ø 216 x 30 x 2.8 mm / 60 T	7901200707	4046664037552

HM140L

	Description	Article number	Barcode
1 Saw blade Hard & Softwood, Laminate	Ø 305 x 30 x 3.0 mm / 24 T	7901201705	4046664031642
2 Saw blade Hard & Softwood, Laminate	Ø 305 x 30 x 3.0 mm / 60 T	7901200707	4046664037552

HM90MP

	Description	Article number	Barcode
1 Multifunction saw blade Hard & Softwood, Laminate, Non-Ferrous, Plastic	Ø 216 x 30 x 2.8 mm / 40 T	7901200701	4014915088806
2 Multifunction saw blade Hard & Softwood, Laminate, Non-Ferrous, Plastic, Steel	Ø 216 x 30 x 1.8 mm / 40 T	7901200703	4014915089131

HM110MP

	Description	Article number	Barcode
1 Multifunction saw blade Hard & Softwood, Laminate, Non-Ferrous, Plastic	Ø 255 x 30 x 2.8 mm / 48 T	7901200702	4014915088813
2 Multifunction saw blade Hard & Softwood, Laminate, Non-Ferrous, Plastic, Steel	Ø 255 x 30 x 2.2 mm / 48 T	7901200704	4014915089568
3 Saw blade Hard & Softwood, Laminate	Ø 255 x 30 x 2.8 mm / 48 T	7901200706	4014915091325

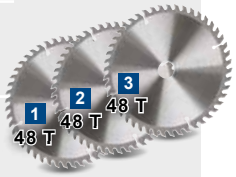

3 SAW BLADE SET

	Description	Article number	Barcode
TCT saw blades Suitable for PL75 & HM80L	Ø 210 x 30 / 25.4 x 2.2 mm / 24 T Ø 210 x 30 / 25.4 x 2.2 mm / 48 T Ø 210 x 30 / 25.4 x 2.2 mm / 60 T	7901200715	4046664041405

Ideal for cutting compounds woods, melamine or laminate. Intensive use on all wood. Universal blade for trimming and cutting of hard-woods

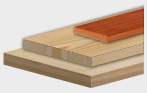

Standard Works and finishing wood, chipboard, laminate and PVC

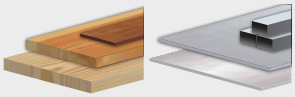

Special for aluminium and non-ferrous metals cutting. Thin wood slicing

2 SAW BLADE SET

	Description	Article number	Barcode
TCT saw blades Suitable for HM110MP & HM254	Ø 254 x 30 / 25.4 x 2.8 mm / 48 T Ø 254 x 30 / 25.4 x 2.8 mm / 60 T	7901200714	4046664041399

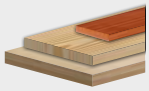

Standard Works and finishing wood, chipboard, laminate and PVC

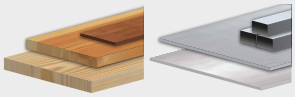

Special for aluminium and non-ferrous metals cutting. Thin wood slicing

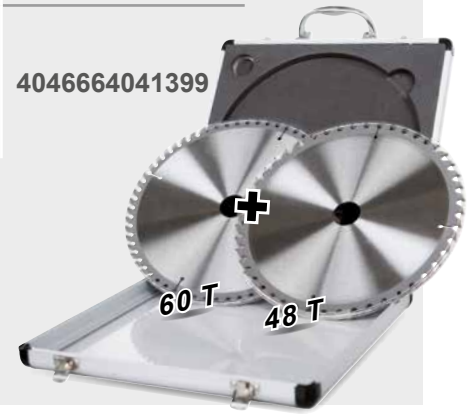

2 SAW BLADE SET

	Description	Article number	Barcode
TCT saw blades	Ø 315 x 30 / 25.4 x 2.8 mm / 24 T Ø 315 x 30 / 25.4 x 2.8 mm / 48 T	7901200716	4046664042402

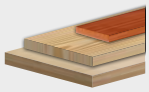

Standard Works and finishing wood, chipboard, laminate and PVC

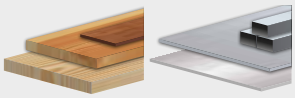

Special for aluminium and non-ferrous metals cutting. Thin wood slicing.

MULTIFUNCTION SAW BLADES

	Description	Article number	Barcode
Saw blade set (2-piece)	Ø 216 x 30 x 2.8 / 1.8 mm / 40 T	7901201706	4046664120582
Saw blade set (3-piece)	Ø 255 x 30 x 2.8 / 2.2 mm / 48 T	7901200721	4014915227922

UMF1550 / UMF1600 / UMF2000

UNIVERSAL BASE FRAME

- Working at an **ergonomic height**
- **Robust yet compact lightweight design** for easy transport and storage
- **Stable device mounting that can be used universally for almost all makes**
- Device mounting easy to secure for safe and ergonomic work
- Sturdy lateral extension for sawing long work pieces **from 0.93 – 1.94 m (UMF1550)**
- Sturdy lateral extension for sawing long work pieces **from 1.0 – 1.65 m (UMF1600)**
- Sturdy lateral extension for sawing long work pieces **from 1.16 – 2.0 m (UMF2000)**

SPECIFICATIONS

Dimensions L x W x H	935 – 1945 x 545 x 805 – 915 mm
Stand height	763 mm
Extension	935 – 1945 mm
Max. load capacity	150 kg

LOGISTICAL DATA

Weight net / gross	9.8 / 10.8 kg
Packaging dimensions	910 x 250 x 150 mm
Article number	5907107900
Barcode	4046664040521
20 Container	880 pcs
40 Container	1810 pcs
40 HQ Container	2070 pcs

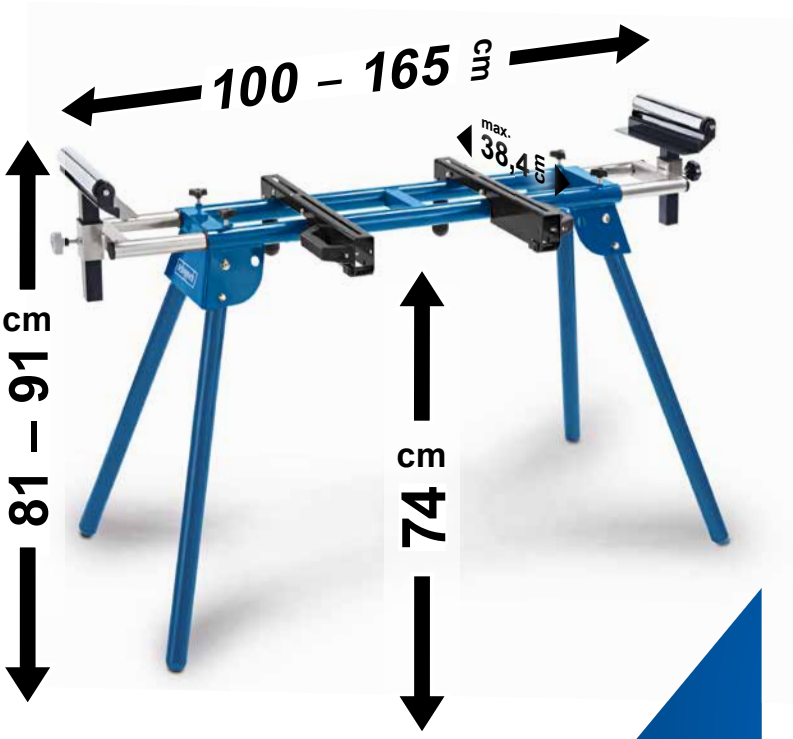

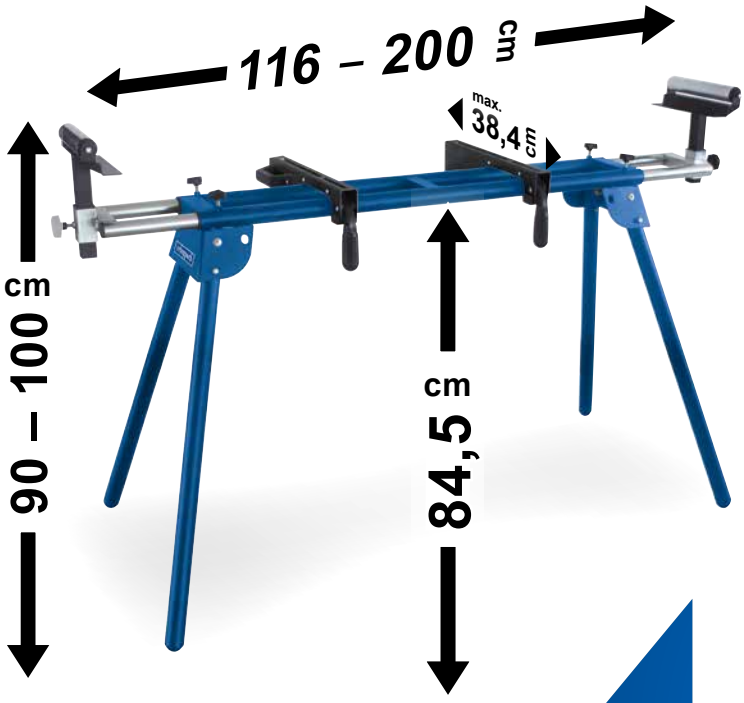

SPECIFICATIONS

Dimensions L x W x H	1000 – 1650 x 580 x 810 – 910 mm
Stand height	740 mm
Extension	1000 – 1650 mm
Max. load capacity	200 kg

LOGISTICAL DATA

Weight net / gross	12,3 / 13,2 kg
Packaging dimensions	1075 x 260 x 190 mm
Article number	5907103900
Barcode	4046664031888
20 Container	540 pcs
40 Container	1140 pcs
40 HQ Container	1320 pcs

SPECIFICATIONS

Dimensions L x W x H	1160 – 2000 x 632 x 900 – 1000 mm
Stand height	845 mm
Extension	1160 – 2000 mm
Max. load capacity	250 kg

LOGISTICAL DATA

Weight net / gross	13.5 / 15 kg
Packaging dimensions	1240 x 290 x 200 mm
Article number	5907102900
Barcode	4046664031499
20 Container	460 pcs
40 Container	960 pcs
40 HQ Container	1120 pcs

HM100T

10" TABLE TOP CROSS-CUT MITRE SAW

- Lightweight **die cast aluminium** design for easy transport
- Powerful **1800 W motor** provides various cutting applications
- **Tilting saw blade from 0 – 45°**
- Compact bench top design fits conveniently in small workshop environments
- **The 60 tooth, carbide tipped blade** stays sharp and makes clean cuts
- **Torsion resistant design and top quality construction**
- Featuring two modes: mitre saw and table saw, making it suitable for a variety of cutting applications
- Dust collection bag for a clean working area

3 IN 1

- ✓ Circular table saw
- ✓ Chop saw
- ✓ Mitre saw

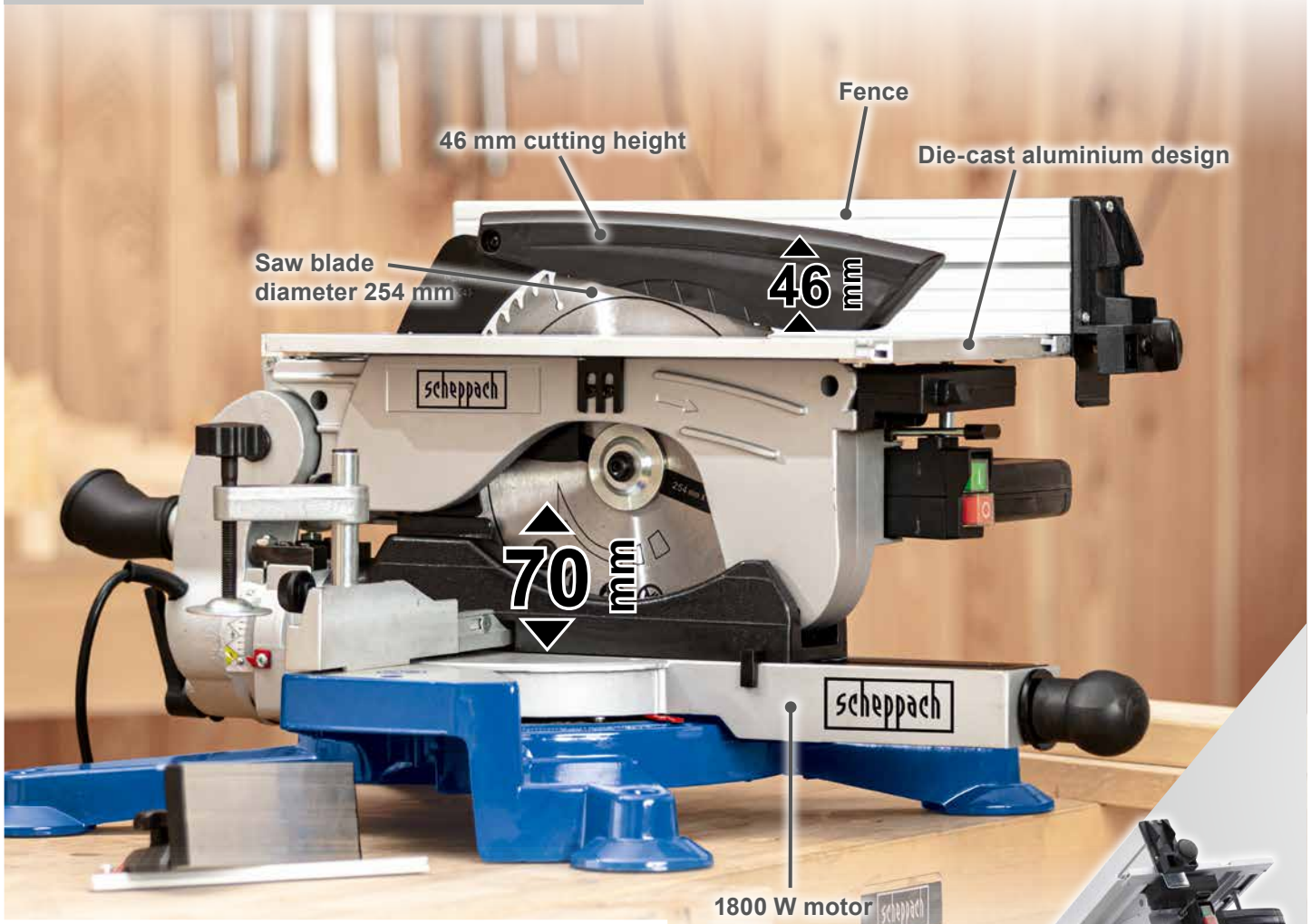

SPECIFICATIONS

Dimensions L x W x H	730 x 465 x 630 mm
Saw blade diameter	254 mm
Motor speed	5000 rpm
Cutting width – cross cutting 90	90 / 40 mm
Cutting depth – cross cutting 45	70 / 70 mm
Cutting height – table mode 90°	46 mm
Table size	460 x 335 mm
Motor	220 – 240 V~
Input	1800 W

LOGISTICAL DATA

Weight net / gross	19 / 24 kg
Packaging dimensions	660 x 580 x 410 mm
Article number	5901103901
Barcode	4046664031864
20 Container	170 pcs
40 Container	360 pcs
40 HQ Container	440 pcs

8" CIRCULAR TABLE SAW

- **Large saw blade with a diameter of 210 mm**
- High-performance **1500 W motor**
- **Extendable table extension** with fold-out legs for sawing wider work pieces
- **Max. cutting height 48 mm**
- **Tilting saw blade from 0 – 45°**
- Compact dimensions, also suitable for small workshops
- Carbide saw blade for consistent and precise results
- Maximum work safety ensured by saw blade guard
- **Mitre gauge and fence as standard**

360°

SPECIFICATIONS

Dimensions L x W x H	525 x 470 x 420 mm
Saw blade dimensions	Ø 210 x Ø 30 x 2,6 mm, 24T
Table size	485 x 445 mm
Cutting depth at 90°	48 mm
Cutting depth at 45°	45 mm
Motor	220 - 240 V~
Input	1500 W

LOGISTICAL DATA

Weight net / gross	14 / 16 kg
Packaging dimensions	545 x 500 x 360 mm
Article number	5901302901
Barcode	4014915080077
20 Container	264 pcs
40 Container	576 pcs
40 HQ Container	672 pcs

Optional accessories can be found on page 32

HS100S

10" CIRCULAR TABLE SAW

- High-performance **2000 W motor**
- Table extensions increase the **space on the left and right**
- **Table height 830 mm, table dimensions 563 x 583 mm**
- Standard base frame with non-slip rubber feet
- **Cutting height up to 85 mm**
- **Carbide saw blade with a diameter of 250 mm**
- **Tilting saw blade from 0 – 45°**
- Heights and angles can be adjusted with a hand wheel
- **Includes saw blade guard, mitre gauge and fence**

Mitre gauge

360°

INCLUDED

SPECIFICATIONS

Dimensions L x W x H	894 x 630 x 1030 mm
Saw blade dimensions	Ø 250 x Ø 30 x 2,8 mm, 24T
Table size	563 x 583 mm
Table size with extension	894 x 583 mm
Table height	830 mm
Cutting depth at 90°	85 mm
Cutting depth at 45°	65 mm
Motor	220 – 240 V~
Input	2000 W

LOGISTICAL DATA

Weight net / gross	19 / 22.3 kg
Packaging dimensions	710 x 620 x 330 mm
Article number	5901310901
Barcode	4046664037637
20 Container	189 pcs
40 Container	399 pcs
40 HQ Container	453 pcs

Optional accessories can be found on page 32

10" CIRCULAR TABLE SAW

- Powerful **2000 Watt motor**
- **Table width extensions on both sides for cutting large workpieces**
- Base frame included
- **Max. cutting height 87 mm**
- Carbide saw blade with a diameter of 254 mm
- **Tilting saw blade from 0 – 45°**
- **Bevel and cutting height adjustable via handwheel**
- **Saw blade guard, mitre gauge and fence included**

360°

SPECIFICATIONS

Dimensions L x W x H	930 x 669 x 1025 mm
Saw blade dimensions	Ø 254 x Ø 30 x 2,8 mm, 24D
Table size	430 x 626 mm
Table size with extension	930 x 626 mm
Table height	885 mm
Cutting depth at 90°	87 mm
Cutting depth at 45°	55 mm
Motor	230 V~ / 50 Hz
Input	2000 W

LOGISTICAL DATA

Weight net / gross	19 / 21 kg
Packaging dimensions	676 x 562 x 372 mm
Article number	5901312901
Barcode	4046664069744
20 Container	224 pcs
40 Container	476 pcs
40 HQ Container	544 pcs

Optional accessories can be found on page 32

HS115

10" CIRCULAR TABLE SAW

- **Powerful 2000 W motor**
- **Table dimensions 530 x 640 mm, height without base frame 335 mm**
- **Adjustable table extensions** increase the support surface on **the left and the right**
- **Foldable frame with wheels for easy transport** and space-saving storage
- **Cutting height, depending on the angle, up to 83 mm**
- **Carbide saw blade with Ø 255 mm**
- **Height and angle adjustment with handwheel**
- **Including saw blade protection, sliding carrier plate, mitre gauge and fence**

LOGISTICAL DATA

Weight net / gross	28 / 33 kg
Packaging dimensions L x B x H	910 x 750 x 370 mm
Article number	59013209942
Barcode	4046664116080
20 Container	108 pcs
40 Container	228 pcs
40 HQ Container	270 pcs

SPECIFICATIONS

Dimensions L x W x H	1090 x 760 x 1140 mm
Saw blade dimensions	Ø 255 x Ø 30 x 2,8 mm, 24T
Table size	530 x 640 mm
Table size with extension	742 – 1195 x 640 mm
Tilt angle	0 – 45°
Table height	915 mm
Cutting height at 90°	83 mm
Cutting height at 45°	58 mm
Engine	220 – 240 V~ / 50 Hz
Engine output	2000 W
Motor speed	4500 rpm

Optional accessories can be found on page 32

HS112-2x

2 SPEEDS

10" CIRCULAR TABLE SAW

- Powerful **2200 W engine**
- **Table extensions on the left and right** increase the support surface
- Saw blade with Ø 254 mm for precise cutting results
- **Two saw blade speeds, 3200 and 5000 rpm**, for optimum material adaption
- **Suitable for wood, aluminium, steel, non-ferrous metals, plastic, chip boards or coated boards**
- **Saw blade continuously adjustable from 0 – 45° for exact mitre cuts**
- **Max. cutting height 85 mm**
- **2-in-1 hand wheel for convenient height and mitre angle**
- Integrated connection for suction
- **Including saw blade guard, mitre gauge, fence and base frame**

selber machen
PRAXISTEST
GUT
★★★★
scheppach
HS112-2x
Heft 01/22

Advantages of a MULTIFUNCTION SAWBLADE

- One saw blade
- Two speeds
- Unlimited possibilities

SPECIFICATIONS

Dimensions L x W x H	800 x 1005 x 1100 mm
Saw blade dimensions	Ø 254 x Ø 30 x 2,8 mm, 48T
Blade speed	3200 / 5000 min^{-1}
Table size	575 x 555 mm
Table size with extension	575 x 1005 mm
Tilt angle	0 – 45°
Table height	880 mm
Cutting height at 90°	85 mm
Cutting height at 45°	65 mm
Engine	220 – 240 V~ / 50 Hz
Engine output	2200 W

LOGISTICAL DATA

Weight net / gross	26.5 / 30 kg
Packaging dimensions L x B x H	750 x 650 x 365 mm
Article number	5901318905
Barcode	4046664128250
20 Container	144 pcs
40 Container	324 pcs
40 HQ Container	378 pcs

Optional accessories can be found on page 32

HS105

10" CIRCULAR TABLE SAW

- Powerful **2000 Watt motor**
- **Pull-out table width extension** for enhanced stability when cutting large workpieces
- **Crosscutting mitre to make versatile cross-cuttings**
- Base frame included
- **Max cutting depth: 80 mm**
- Carbide saw blade for consistent and precise cutting results
- **2in1 hand wheel** for quick height and micro-bevel adjustments
- **Includes safety blade guard, mitre gauge and fence**
- **On board storage for included and assembly tools**

Scheppach HS 105
Einstiegsklasse
Heimwerker Praxis 6/2018
Preis/Leistung: gut
1,7

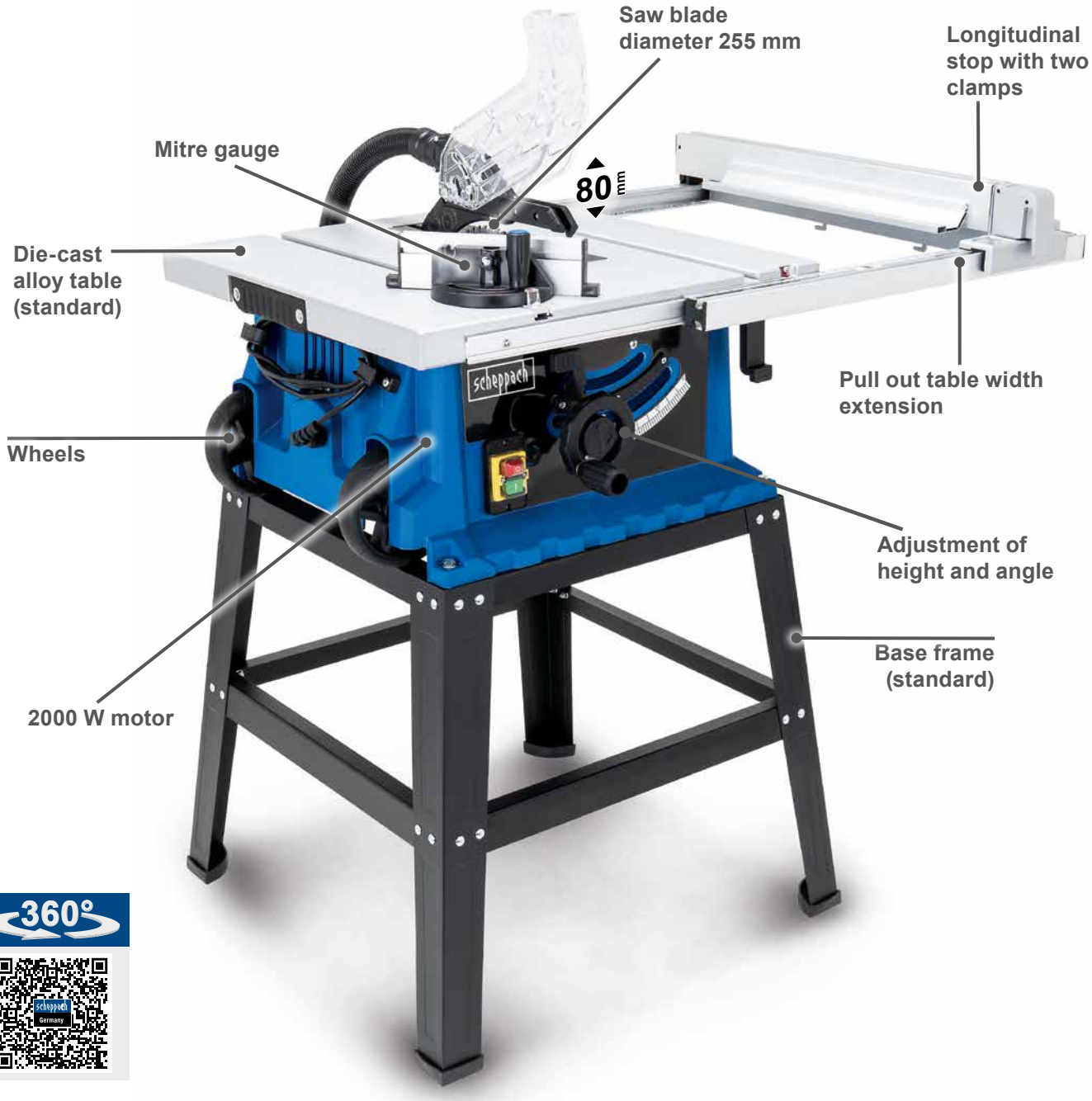

360°

SPECIFICATIONS

Dimensions L x W x H	720 x 680 x 380 mm
Saw blade dimensions	Ø 255 x Ø 30 x 2,8 mm, 60T
Table size with extension	565 x 675 mm
Cutting depth at 90°	80 mm
Cutting depth at 45°	55 mm
Motor	220 – 240 V~
Input	2000 W

LOGISTICAL DATA

Weight net / gross	29 / 33 kg
Packaging dimensions	750 x 680 x 370 mm
Article number	5901308901
Barcode	4046664034988
20 Container	144 pcs
40 Container	306 pcs
40 HQ Container	357 pcs

Optional accessories can be found on page 32

12" CIRCULAR TABLE SAW

- **Powerful 2800 W – 400 V~ (2200 W – 230 V~) induction motor**
- **Sliding table carriage standard**
- **Sturdy, powder-coated sheet steel design and galvanised table-top**
- **Table length extension and table width extension**
- Blade guard with suction hose outlet
- Fully adjustable blade height by easy use of handwheel
- **Max. 83 mm cutting depth**
- **2 long life TCT blades – Ø 315 mm** for precise cutting results
- Saw blade guard for enhanced security
- Sturdy fence
- **Foldable handles and wheels for easy transport**

Scheppach ts 310
Oberklasse
Heimwerker Praxis 3/2014
Preis/Leistung: gut
1,5

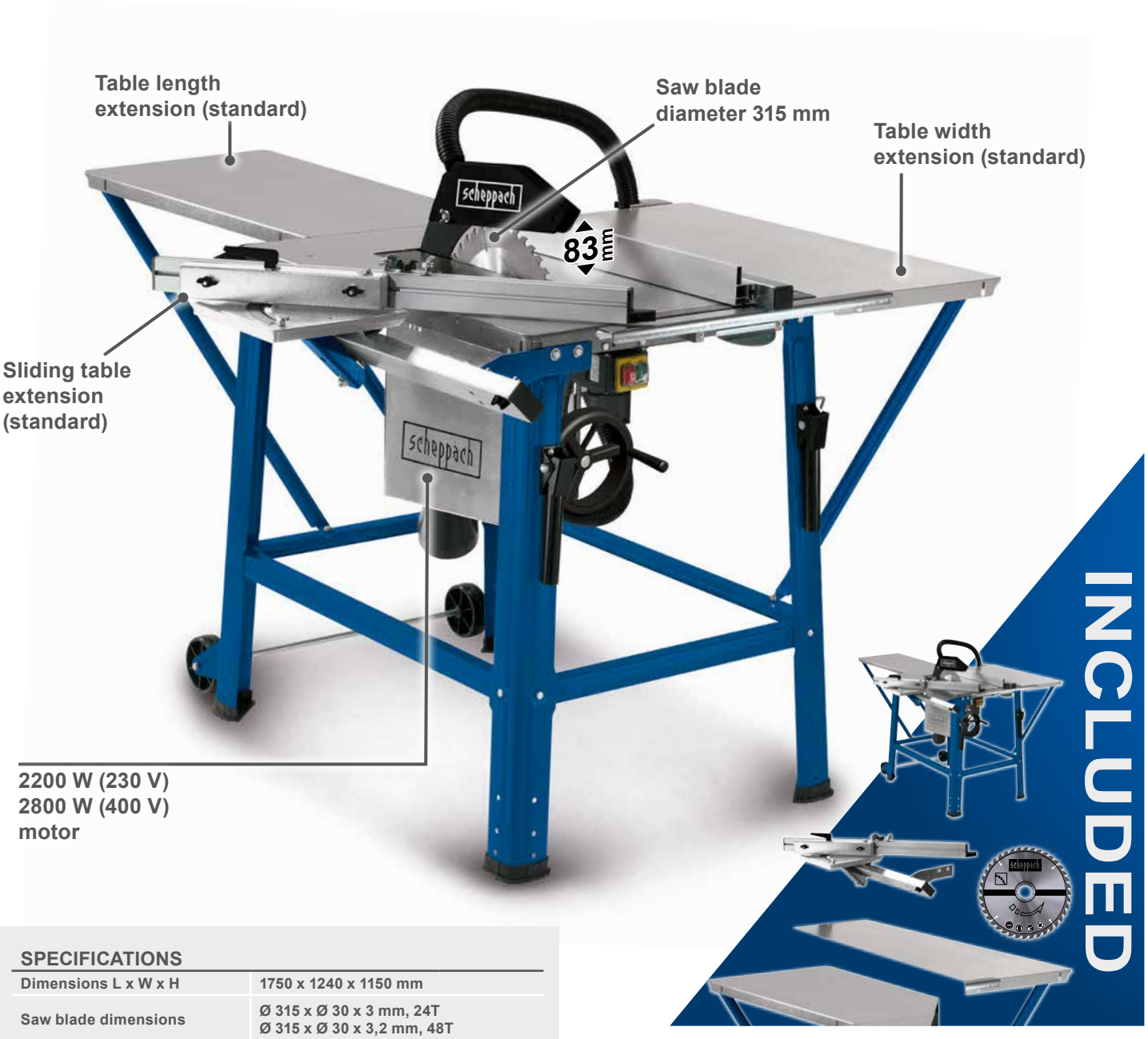

SPECIFICATIONS

Dimensions L x W x H	1750 x 1240 x 1150 mm	
Saw blade dimensions	Ø 315 x Ø 30 x 3 mm, 24T Ø 315 x Ø 30 x 3,2 mm, 48T	
Motor speed	2800 rpm	
Table size	800 x 550 mm	
Table height	850 mm	
Cutting depth at max. 90°	83 mm	
Cutting depth at max. 45°	49 mm	
Saw blade adjustable	0 – 45°	
Sliding table guide rail	960 mm	
Motor	230 V~	400 V
Input	2200 W	2800 W

LOGISTICAL DATA

Weight net / gross	55 / 61 kg (230 V~)	58 / 64 kg (400 V)
Packaging dimensions	890 x 610 x 450 mm	
Article number	4901305901 (230 V~)	4901305902 (400 V)
Barcode	4014915082040	4014915082057
20 Container	110 pcs	
40 Container	225 pcs	
40 HQ Container	225 pcs	

Optional accessories can be found on page 32

HS80

	Description	Article number	Barcode
1 Saw blades	Ø 210 x 30 / 25.4 x 2.2 mm / 24 T Ø 210 x 30 / 25.4 x 2.2 mm / 48 T Ø 210 x 30 / 25.4 x 2.2 mm / 60 T	7901200715	4046664041405
2 Electrical push stick		7901302701	4046664064190

HS100S

	Description	Article number	Barcode
1 Saw blade	Ø 250 x 30 x 2.8 / 1.8 mm / 24 T	3901306701	4046664009504
2 Electrical push stick		7901302701	4046664064190

HS105

	Description	Article number	Barcode
1 Saw blades	Ø 254 x 30 / 25.4 x 2.8 mm / 48 T Ø 254 x 30 / 25.4 x 2.8 mm / 60 T	7901200714	4046664041399
2 Saw blades	Ø 255 x 30 x 2.8 / 48 T	3901306701	4046664009504
3 Electrical push stick		7901302701	4046664064190

TS310

	Description	Article number	Barcode
1 Saw blades	Ø 315 x 30 / 25.4 x 2.8 mm / 24 T Ø 315 x 30 / 25.4 x 2.8 mm / 48 T	7901200716	4046664042402
2 Saw blades	Ø 315 x 30 x 3 x 2 mm / 24 T	3901302701	4046664002314
3 Saw blades	Ø 315 x 30 x 3 x 2 mm / 48 T	3901302702	4046664002314
4 Electrical push stick		7901302701	4046664064190

MULTIFUNCTION SAW BLADES

	Description	Article number	Barcode
Saw blade set (2-piece)	Ø 216 x 30 x 2.8 / 1.8 mm / 40 T	7901201706	4046664120582
Saw blade set (3-piece)	Ø 255 x 30 x 2.8 / 2.2 mm / 48 T	7901200721	4014915227922

SPECIFICATIONS

Dimensions L x W x H	650 x 255 x 340 mm
Table size L / W	407 x 254 mm
Table adjustment	-45° till +45°
Stroke speed	550 – 1500 rpm
Cutting height / depth	50 / 405 mm
Suction connector diameter	34.5 mm
Motor	230 – 240 V~ / 50 Hz
Input	90 W

LOGISTICAL DATA

Weight net / gross	8 / 10 kg
Packaging dimensions	720 x 294 x 410 mm
Article number	5901408901
Barcode	4046664154884
20 Container	300 pcs
40 Container	600 pcs
40 HQ Container	708 pcs

16" SCROLL SAW

- **Cutting height/depth: 50 / 405 mm**
- **Worktable made of steel sheet, can be tilted up from -45° till +45°**
- **Variable stroke rate of 550 – 1500 rpm and 18 mm lifting height**
- **LED lamp** to illuminate the work area
- Fits scroll saw and standard fret saw blades with lengths of 127 (134) mm
- **Quick-clamp screw for easy saw blade replacement**
- **Low vibration** for optimum and precise sawing results
- Blowing nozzle for a clear view of the work area
- **Workpiece retainer** makes it easier to guide the workpiece

Optional accessories can be found on page 39

DECO FLEX SL

Quick-clamp screw

Flexible LED lamp

Flexible blowing nozzle

Tilting worktable on both sides -45° till +45°

Variable speed

Flexible shaft

OPTIONAL ACCESSORIES

TOOL SET

Article number: 3901402701
Barcode: 4046664031284

16" SCROLL SAW WITH FLEXIBLE SHAFT

- **Cutting height/depth: 50 / 405 mm**
- **Wide worktable can be tilted by -45° till +45° on both sides**
- **Variable stroke rate of 550 – 1500 rpm and 18 mm lifting height**
- Fits scroll saw and standard fret saw blades with lengths of 127 (134) mm
- **Quick-clamp screw for easy saw blade replacement**
- **Flexible shaft with drill chuck** for cutting, grinding and polishing
- **LED work lamp** to illuminate the work area
- Workpiece retainer for easier sawing of cut outs
- **Low vibration** for optimum and precise sawing results
- **Blowing nozzle** for a clear view of the work area

SPECIFICATIONS

Dimensions L x W x H	665 x 310 x 340 mm
Table size L / W	407 x 254 mm
Table adjustment	-45° till +45°
Stroke speed	550 – 1500 rpm
Cutting height / depth	50 / 405 mm
Suction connector diameter	34.5 mm
Flexible shaft length	1000 mm
Speed shaft	1650 – 4500 rpm
Motor	230 – 240 V~ / 50 Hz
Input	90 W

LOGISTICAL DATA

Weight net / gross	8.1 / 10.1 kg
Packaging dimensions	730 x 345 x 410 mm
Article number	5901410901
Barcode	4046664146346
20 Container	250 pcs
40 Container	520 pcs
40 HQ Container	600 pcs

Optional accessories can be found on page 39

Advantages of a FOOT PEDAL

- Easy to operate – power stays on as long as foot pressure is applied
- Keep both hands free to control your work at all times
- Turn machine on and off instantly simply by stepping on or off the pedal
- Generous 1300 mm cord length

INCLUDED

16" SCROLL SAW WITH FOOT PEDAL

- **Cutting height/depth: 50 / 405 mm**
- **Wide worktable can be tilted by -45° till +45° on both sides**
- **Variable stroke rate of 550 – 1500 rpm and 18 mm lifting height**
- **Both hands free to guide the workpiece when operating the machine via foot pedal**
- Fits scroll saw and standard fret saw blades with lengths of 127 (134) mm
- **Quick-clamp screw** for easy saw blade replacement
- **LED work lamp** to illuminate the work area
- Workpiece retainer for easier sawing of cut outs
- **Low vibration** for optimum and precise sawing results
- **Flexible blowing nozzle** for a clear view of the work area

SPECIFICATIONS

Dimensions L x W x H	650 x 255 x 340 mm
Table size L / W	407 x 254 mm
Table adjustment	-45° till +45°
Stroke speed	550 – 1500 rpm
Cutting height / depth	50 / 405 mm
Suction connector diameter	34,5 mm
Motor	230 – 240 V~ / 50 Hz
Input	90 W

LOGISTICAL DATA

Weight net / gross	8.1 / 10.1 kg
Packaging dimensions	720 x 294 x 410 mm
Article number	5901409901
Barcode	4046664146322
20 Container	300 pcs
40 Container	600 pcs
40 HQ Container	700 pcs

Optional accessories can be found on page 39

16" SCROLL SAW WITH FOOT PEDAL, FLEXIBLE SHAFT AND ACCESSORY BOX

- **Cutting height/depth: 50 / 405 mm**
- **Wide worktable can be tilted by -45° till +45° on both sides**
- **Variable stroke rate of 550 – 1500 rpm and 18 mm lifting height**
- **Both hands free to guide the workpiece when operating the machine via foot pedal**
- Fits scroll saw and standard fret saw blades with lengths of 127 (134) mm
- **Quick-clamp screw for easy saw blade replacement**
- **Flexible shaft with drill chuck** for cutting, grinding and polishing
- **LED work lamp** to illuminate the work area
- Workpiece retainer for easier sawing of cut outs
- **Low vibration** for optimum and precise sawing results
- **Flexible blowing nozzle** for a clear view of the work area

LOGISTICAL DATA

Weight net / gross	8.3 / 10.3 kg
Packaging dimensions	730 x 345 x 410 mm
Article number	5901411901
Barcode	4046664146353
20 Container	250 pcs
40 Container	520 pcs
40 HQ Container	600 pcs

SPECIFICATIONS

Dimensions L x W x H	665 x 310 x 340 mm
Table size L / W	407 x 254 mm
Table adjustment	-45° till +45°
Stroke speed	550 – 1500 rpm
Cutting height / depth	50 / 405 mm
Suction connector diameter	34.5 mm
Flexible shaft length	1000 mm
Speed shaft	1650 – 4500 rpm
Motor	230 – 240 V~ / 50 Hz
Input	90 W

Optional accessories can be found on page 39

SD1600V

VARIABLE SPEED

SCROLL SAW

- **Cutting height/depth: 50/406 mm**
- **Saw blade length 134 mm**
- **Work table can be tilted to 45°**
- **Adjustable stroke rate 500 – 1,700 rpm and 12 mm lifting height**
- **Flexible LED light** to illuminate the work area
- Fits scroll saw and standard fret saw blades with lengths of 127 (134) mm
- **Quick-release lever for easy saw blade replacement**
- **Low vibration** for perfect and precise sawing results
- Unobstructed view of the work area, thanks to flexible blower nozzle
- **Retaining device** for work pieces to make guidance easier
- **Storage space for saw blades**

Scheppach SD1600V
Einstiegsklasse
Heimwerker Praxis 6/2016
Preis/Leistung: gut
1,7

SPECIFICATIONS

Dimensions L x W x H	630 x 295 x 370 mm
Table size L / W	255 x 415 mm
Table adjustment	0° – 45°
Stroke speed	500 – 1700 rpm
Cutting height / depth	50 / 406 mm
Suction connector diameter	35 mm
Motor	220 – 240 V~
Input	120 W

LOGISTICAL DATA

Weight net / gross	12.7 / 14.8 kg
Packaging dimensions	655 x 285 x 365 mm
Article number	5901403903
Barcode	4046664037040
20 Container	402 pcs
40 Container	864 pcs
40 HQ Container	1008 pcs

Optional accessories can be found on page 39

DECO-XLS

16" SCROLL SAW WITH FOOT PEDAL

- **Solid base** for stability
- **Cutting height/depth: 50 / 406 mm**
- **Aluminium work table can be adjusted by up to +45°**
- **Variable speed of 500 – 1700 rpm and 12 mm lifting height**
- **Flexible and large LED work lamp** to illuminate the entire work area
- Holds jigsaw and coping saw blades with lengths of 127 (134) mm
- **Quick-clamp lever for easy saw blade replacement**
- **Workpiece retainer** to guide the workpiece easily when sawing cut-outs
- **Low vibration** for optimum and precise sawing results
- **Flexible blowing nozzle** for a clear view of the work area
- **Two-handed workpiece guidance by controlling the machine run using wide foot switches**

Advantages of a FOOT PEDAL

- Easy to operate – power stays on as long as foot pressure is applied
- Keep both hands free to control your work at all times
- Turn machine on and off instantly simply by stepping on or off the pedal
- Generous 1300 mm cord length

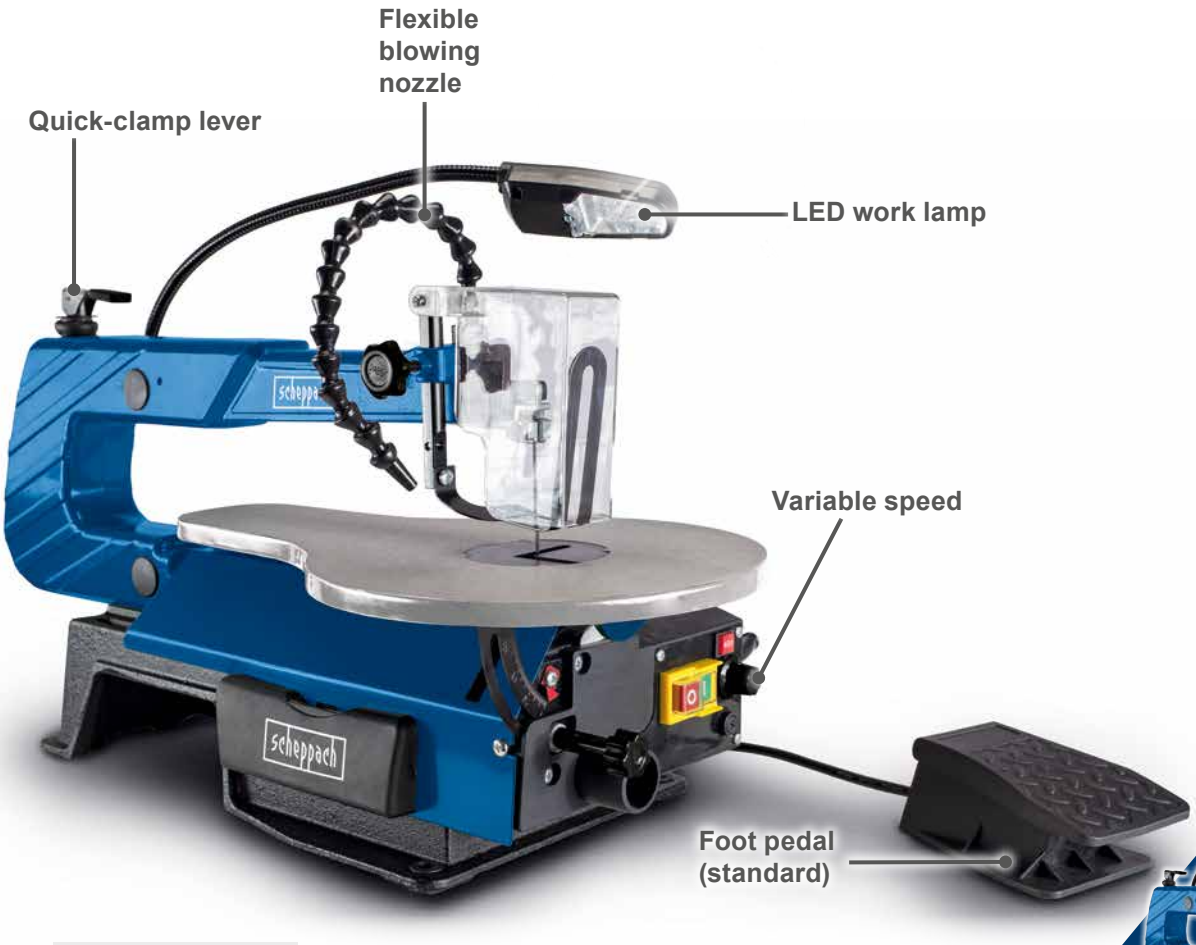

SPECIFICATIONS

Dimensions L x W x H	630 x 295 x 370 mm
Table size L / W	415 x 255 mm
Table adjustment	0° – 45°
Stroke speed	500 – 1700 rpm
Cutting height / depth	50 / 406 mm
Suction connector diameter	35 mm
Motor	220 – 240 V~
Input	120 W

LOGISTICAL DATA

Weight net / gross	13.3 / 14.9 kg
Packaging dimensions	655 x 285 x 365 mm
Article number	5901407901
Barcode	4046664107460
20 Container	402 pcs
40 Container	864 pcs
40 HQ Container	1008 pcs

Optional accessories can be found on page 39

DECO SL / DECO FLEX SL / DECO SWITCH / DECO MAX / SD1600V / DECO-XLS

	Description	Article number	Barcode
1 **Tool set (plastic-box)** for DECO SWITCH and DECO MAX	64 pcs.	3901402701	4046664031284
2 **Universal saw blade set**	5 x 12 pcs.	88000010	4014915038030
3 **Saw blades 6 pcs.**	Ø 135 x 2 x 0.25 mm / 25 T Ø 135 x 2 x 0.25 mm / 18 T Ø 135 x 2 x 0.5 mm / 10 T	88000011 88000012 88000013	4014915030805 4014915030812 4014915030829
4 **Universal saw blades**	12 pcs., 130 x 1.03 x 0.38 mm / 38 T	88001509	4014915033844
5 **Sanding belt set for scroll saws**	6 pcs., suitable for scroll saws with 1 27 mm pin ends 2 x grit 100, 2 x grit 180, 2 x grit 240	7901403704	4014915230496

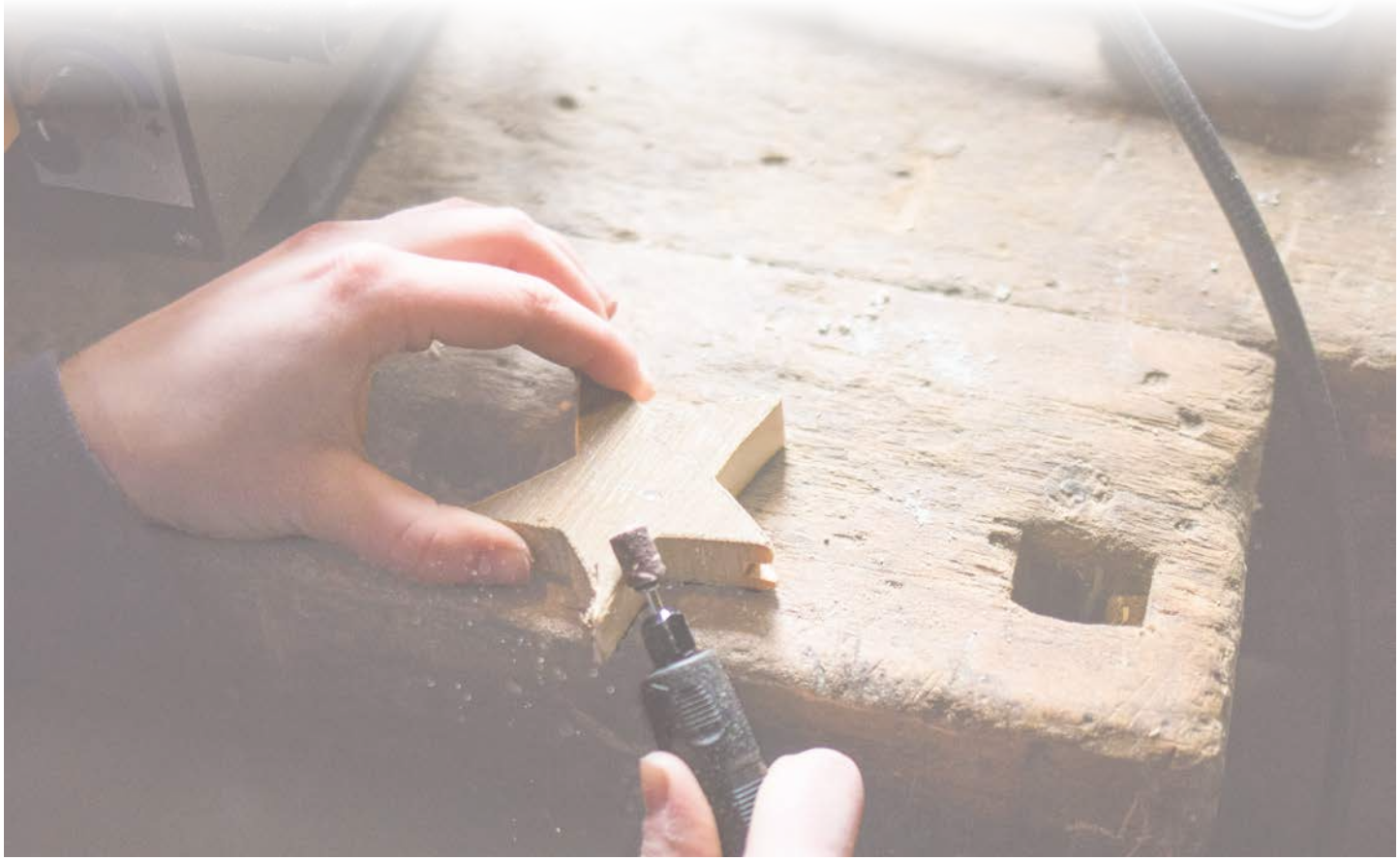

HBS30

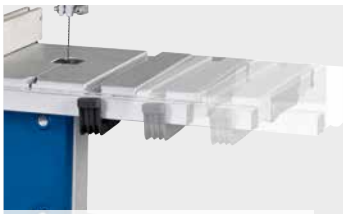

Extendable saw table to ensure safe work, even with large work pieces.

Work table can be steplessly angled.

8" BAND SAW INCLUSIVE 3 BLADES

- High-performance **350 W induction motor** with consistent cutting speed for working quietly and ensuring precise cutting results
- Sturdy and spacious **extendable work table (300 x 380 – 520 mm)**
- Work table with **angle scale can be continuously adjusted from 0° to 45° for mitre angle**
- **Fence** with quick-release fastener for exact adjustment and straight cuts
- Robust steel construction and **aluminium pressure die-cast work table**
- **Thickness capacity for work pieces up to 80 mm**
- Optional cross stop for working safely
- Dustproof on/off safety switch
- **Connection for external dust extraction**
- **Suitable for conventional 1400 mm band saw blades up to a width of 12 mm**
- **Includes 3 band saw blades with 6, 10 and 15 teeth per inch**

360°

INCLUDED

SPECIFICATIONS

Dimensions L x W x H	420 x 530 x 690 mm
Table size	300 x 380 – 540 mm
Table adjustment	0° – 45°
Band wheel Ø	205 mm
Saw blade length	1400 mm
Cutting speed	900 rpm
Thickness capacity / width	80 / 200 mm
Motor	230 – 240 V~
Input	350 W

LOGISTICAL DATA

Weight net / gross	19 / 21 kg
Packaging dimensions	740 x 420 x 310 mm
Article number	5901501905
Barcode	4046664073499
20 Container	301 pcs
40 Container	630 pcs
40 HQ Container	720 pcs

Optional accessories can be found on page 48

HBS261

2 SPEEDS

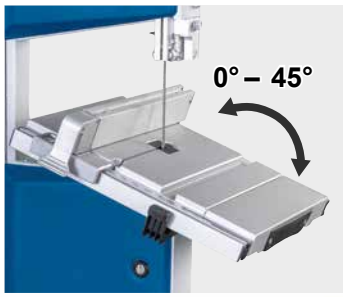

powerful motor

550 Watt

10" BAND SAW WITH 2nd BLADE

- **Powerful 550 W induction motor** with consistent cutting speed for working quietly and ensuring precise cutting results
- Sturdy and spacious **extendable work table (300 x 380 – 520 mm)**
- Work table with **angle scale can be continuously adjusted from 0° to 45°** for mitre angles
- Long and solid fence with quick-release fastener for precise cutting results
- Robust steel construction and **aluminium pressure die-cast work table**
- **Large thickness capacity for big work pieces up to 120 mm**
- **Two speeds, 660 rpm and 960 rpm**, for different materials
- Dustproof on/off safety switch
- **Connection for external dust extraction**
- **Includes mitre gauge and 2nd saw band**

360°

INCLUDED

SPECIFICATIONS

Dimensions L x W x H	600 x 440 x 860 mm
Table size	300 x 380 – 520 mm
Table adjustment	0° – 45°
Band wheel diameter	250 mm
Saw blade length	1790 mm
Cutting speed	660 / 960 rpm
Thickness capacity / width	120 / 245 mm
Motor	220 – 240 V~
Input	550 W

LOGISTICAL DATA

Weight net / gross	20.5 / 27.5 kg
Packaging dimensions	880 x 440 x 340 mm
Article number	5901505901
Barcode	4046664068051
20 Container	180 pcs
40 Container	390 pcs
40 HQ Container	469 pcs

Optional accessories can be found on page 48

HBS400

Precise upper and lower roller guide with ball-bearings.

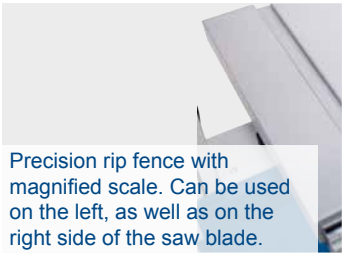

Precision rip fence with magnified scale. Can be used on the left, as well as on the right side of the saw blade.

12" BAND SAW 2nd BLADE AND STAND INCLUDING

- Powerful **750 W induction motor** with consistent cutting speed for working quietly and ensuring precise cutting results
- Sturdy and spacious **extendable work table (400 x 500 – 860 mm)**
- **Solid base frame** ensures a comfortable working height and stable positioning
- Work table with **angle scale can be continuously adjusted from 0° to 45°** for mitre angle
- Long and solid fence with quick-release fastener for precise cutting results
- Robust steel construction and **aluminium pressure die-cast work table**
- **Large thickness capacity** for big work pieces **up to 170 mm**
- **Two speeds, 360 m/min and 720 m/min**, for different materials
- Dustproof on/off safety switch
- **Connection for external dust extraction**
- **Includes mitre gauge and 2nd saw band**

360°

SPECIFICATIONS

Dimensions L x W x H	840 x 590 x 1630 mm
Table size	500 x 400 mm
Table adjustment	0° – 45°
Band wheel diameter	315 mm
Saw blade length	2240 mm
Cutting speed	720 / 360 m/min
Thickness capacity / width	170 / 305 mm
Motor	220 – 240 V~
Input	750 W

LOGISTICAL DATA

Weight net / gross	59 / 61 kg
Packaging dimensions	1100 x 400 x 500 mm
Article number	5901503905
Barcode	4046664073703
20 Container	120 pcs
40 Container	220 pcs
40 HQ Container	220 pcs

Optional accessories can be found on page 48

8" PROFESSIONAL BAND SAW

- **300 W induction motor** with consistent cutting speed for precise cutting results
- **Hardened precision 3-roller guide** above and below the table
- **Upper saw band guidance can be height-adjusted using toothed rack**
- **Balanced, polished band wheels with rubber facing**
- Sturdy 313 x 302 mm aluminium work table
- **Work table with angle scale can be continuously adjusted from 0° to 45°** for mitre angle
- **Thickness capacity 100 mm, throat 195 mm**
- **Precision fence** with quick-release fastener, **can be used on the left/right of the saw band**
- Height-adjustable saw blade guard
- Dustproof on/off safety switch
- **Connection for external dust extraction**

A solid table provides an ideal and low friction work support. Precision ripping fence with sight glass.

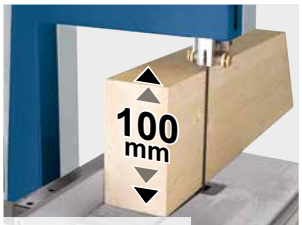

Impressive cutting height of 100 mm.

Triple roller precision blade guidance system. Fitted above and below table.

Balanced band wheels with rubber facing.

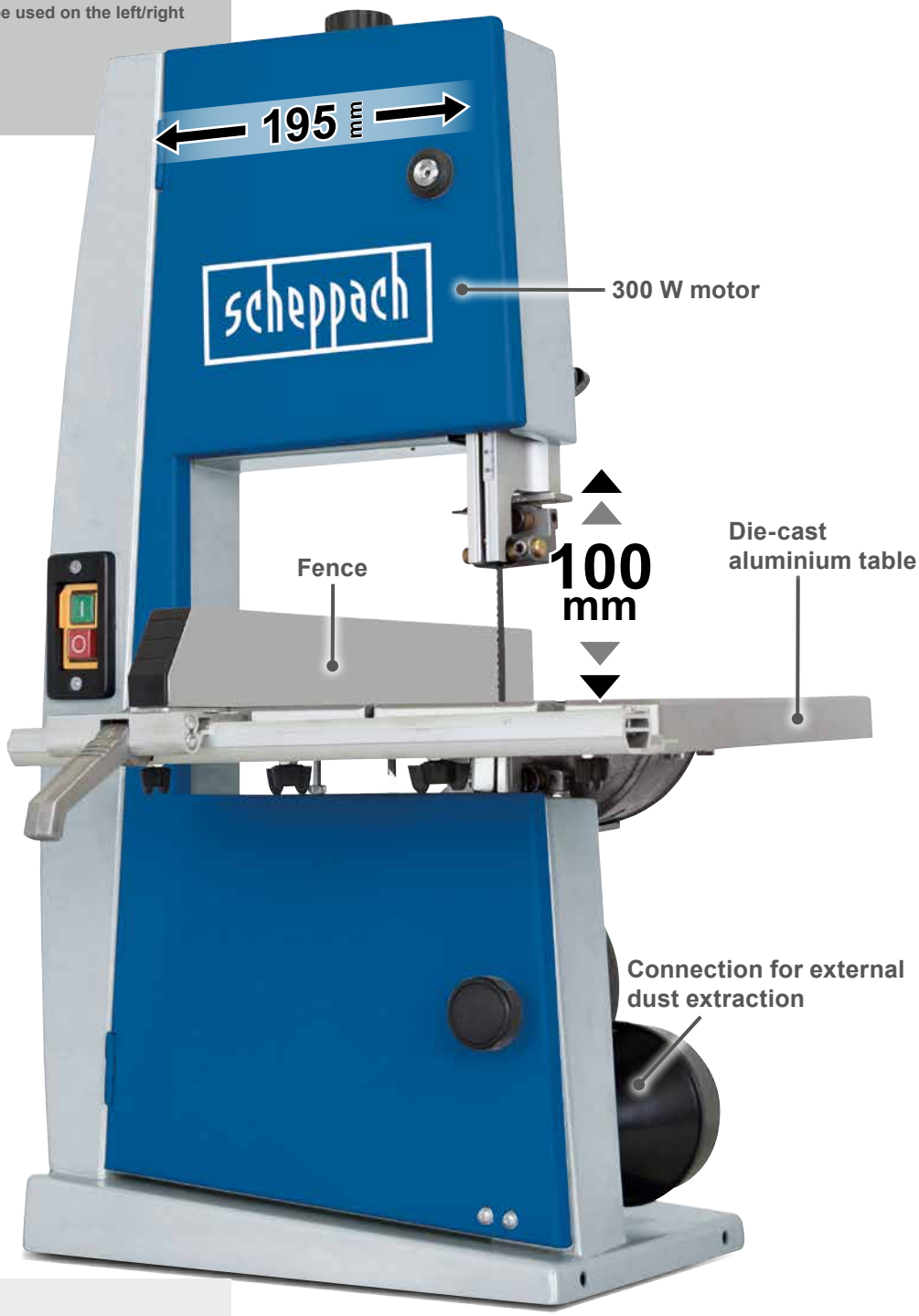

SPECIFICATIONS

Dimensions L x W x H	450 x 500 x 700 mm
Table size	313 x 302 mm
Table adjustment	0° – 45°
Band wheel diameter	200 mm
Saw blade length	1490 mm
Cutting speed	880 rpm
Thickness capacity / width	100 / 195 mm
Motor	230 – 240 V~
Input	300 W

LOGISTICAL DATA

Weight net / gross	18 / 21 kg
Packaging dimensions	783 x 415 x 335 mm
Article number	1901501901
Barcode	4014915079002
20 Container	268 pcs
40 Container	536 pcs
40 HQ Container	600 pcs

Optional accessories can be found on page 48

BASA3

INCLUDED

Cutting height adjustment using hand wheel.

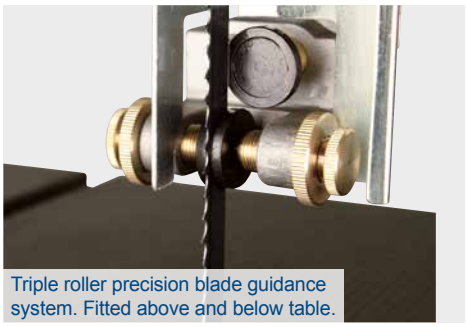

Triple roller precision blade guidance system. Fitted above and below table.

Precision fence with magnified scale. Can be used on the left or on the right side of the saw blade.

Scheppach BASA3
Oberklasse 1,3
Heimwerker Praxis 1/22
Preis/Leistung: sehr gut

Testsieger
Heimwerker Praxis 1/22

360°

12" PROFESSIONAL BAND SAW

- **Unique vario drive adjustable from 370 to 750 rpm**
- **Sturdy cast-iron table tiltable from -8° to +45°**
- **Triple roller precision blade guidance system** above and below the table
- Balanced and **ground band wheels with rubber facing**
- **Quick-clamping lever for saw blade**
- **Maximum cutting height: 205 mm**
- **Throat 306 mm**
- **Precision fence with magnified scale** which can be set both left and right of saw blade
- **Base frame with wheel kit included**

Unique vario drive. Adjustable speeds from 370 to 750 rpm.

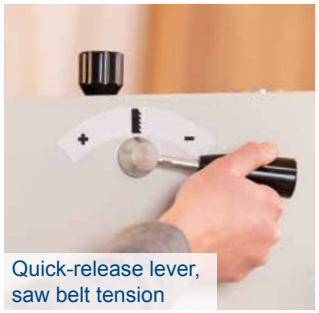
Quick-release lever, saw belt tension

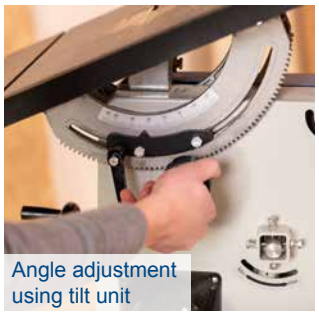
Angle adjustment using tilt unit

LOGISTICAL DATA

Weight net / gross	79 / 84.5 kg	
Packaging dimensions	1150 x 620 x 420 mm	
Article number	1901503901 (230 V)	1901503902 (400 V)
Barcode	4014915079019	4014915079026
20 Container	72 pcs	
40 Container	144 pcs	
40 HQ Container	180 pcs (with palette)	

SPECIFICATIONS

Dimensions L x W x H	610 x 1030 x 1660 mm	
Table size	548 x 400 mm	
Table adjustment	-8° – 45°	
Band wheel diameter	315 mm	
Saw blade length	2360 mm	
Cutting speed	370 – 750 rpm	
Thickness capacity / width	205 / 306 mm	
Motor	220 – 240 V~	400 V
Input	1100 W	

Optional accessories can be found on page 48

BASA4

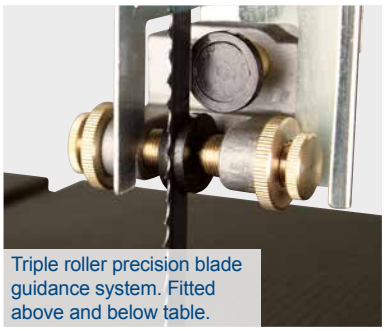

Triple roller precision blade guidance system. Fitted above and below table.

Cutting height adjustment using hand wheel.

Precision fence with magnified scale. Can be used on the left or on the right side of the saw blade.

INCLUDED

2 SPEEDS

Two speeds 700 and 1000 rpm for a variety of materials.

15" PROFESSIONAL BAND SAW

- **Two speeds 700 and 1000 rpm** for the most varying materials
- Sturdy **cast-iron table tiltable from -17° to +45°**
- **Triple roller precision blade guidance system** above and below the table
- **Adjustable saw band guide via toothed rack**
- Balanced and **grinded band wheels with rubber facing**
- Quick-clamping lever for saw blade
- **Maximum cutting height: 250 mm**
- **Throat 375 mm**
- **Precision fence** with magnified scale which can be set both left and right of saw blade
- Base frame with wheel kit included
- **User-friendly table angle adjustment using innovative hand wheel and tilt unit**

Leg stand with wheel kit included. Note the convenient pull out handle for easy manoeuvrability.

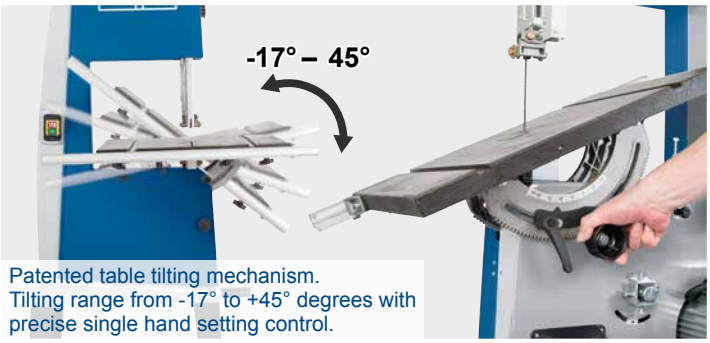

Patented table tilting mechanism. Tilting range from -17° to +45° degrees with precise single hand setting control.

Impressive cutting height of 250 mm.

Quick-lock clamping system for minimum down time when changing bandsaw blade.

LOGISTICAL DATA

Weight net / gross	107 / 114 kg	
Packaging dimensions	1390 x 710 x 480 mm	
Article number	5901504901 (230 V)	5901504902 (400 V)
Barcode	4046664064015	4046664064022
20 Container	48 pcs	
40 Container	96 pcs	
40 HQ Container	96 pcs	

SPECIFICATIONS

Dimensions L x W x H	1050 x 600 x 1940 mm	
Table size	400 x 548 mm	
Table adjustment	-17° – +45°	
Band wheel diameter	380 mm	
Saw blade length	2895 mm	
Cutting speed	700 / 1000 rpm	
Thickness capacity / width	250 / 375 mm	
Motor	230 – 240 V~	400 V
Input	1500 W	

Optional accessories can be found on page 48

BAND SAWS

HBS30

	Description	Article number	Barcode
1 Bandsaw blade	1425 x 6.35 x 0.3 mm, 10 T/in	7901504609	4014915223795
2 Bandsaw blade	1425 x 6.35 x 0.3 mm, 15 T/in	7901504610	4014915223801
3 Bandsaw blade	1425 x 6.35 x 0.3 mm, 6 T/in	7901504611	4014915226666

HBS261

	Description	Article number	Barcode
1 Bandsaw blade	13 x 0.35 x 1790 mm, 6 T/in	7901505702	4014915229797

HBS400

	Description	Article number	Barcode
1 Mitre gauge	-60° to +60°	4901501701	4046664038177
2 Bandsaw blade	13 x 0.5 x 2240 mm, 4 T/in	7901501601	4014915229803
3 Bandsaw blade	6 x 0.5 x 2240 mm, 6 T/in	7901501602	4014915229810
4 Bandsaw blade	6 x 0.35 x 2240 mm, 24 T/in	7901501603	4014915229827

BASA1

	Description	Article number	Barcode
1 Mitre gauge	-60° to +60°	7901501001	4046664042648
2 Bandsaw blade	10 x 0.36 x 1490 mm, 4 T/in	7901504612	4014915229834
3 Bandsaw blade	10 x 0.36 x 1490 mm, 14 T/in	7901501604	4014915229841
4 Bandsaw blade	6 x 0.36 x 1490 mm, 24 T/in	7901501605	4014915229865
5 Bandsaw blade	6 x 0.36 x 1490 mm, 6 T/in	7901501606	4014915229872
6 Bandsaw blade	3 x 0.45 x 1490 mm, 14 T/in	7901501607	4014915229896

BASA3

	Description	Article number	Barcode
1 Bandsaw blade	12 x 0.5 x 2360 mm, 4 T/in	7901501608	4014915229889
2 Bandsaw blade	4,5 x 0.36 x 2360 mm, 14 T/in	7901501609	4014915229902
3 Bandsaw blade	6 x 0.5 x 2360 mm, 6 T/in	7901501610	4014915230250
4 Bandsaw blade	6 x 0.65 x 2360 mm, 22 T/in	7901501611	4014915229858
5 Bandsaw blade	12 x 0.5 x 2360 mm, 6 T/in	7901501612	4014915229919
6 Bandsaw blade	15 x 0.5 x 2360 mm, 4 T/in	7901501613	4014915229926

BASA4

	Description	Article number	Barcode
1 Bandsaw blade	10 x 0.05 x 2895 mm, 4 T/in	7901501614	4014915229933
2 Bandsaw blade	6 x 0.5 x 2895 mm, 6 T/in	7901501615	4014915229940
3 Bandsaw blade	15 x 0.5 x 2895 mm, 4 T/in	7901501616	4014915229957

	Description	Article number	Barcode
1 Safety push stick		7901302701	4046664064190

BENCHTOP SHAPER / ROUTER

- Compact table model
- Adjustable speed control from 11500 to 24000 rpm
- Collets of 6, 8 and 12 mm
- High-performance 1500 W motor
- Angular stop and large aluminium stops as standard
- Table extensions on both sides
- Adjustable spindle height of 0 to 40 mm

SPECIFICATIONS

Dimensions L x W x H	1030 x 475 x 530 mm
Table size	610 x 360 mm
Speed	11500 – 24000 rpm
Spindle height	0 – 40 mm
Table inserts	32 / 47 / 55 mm
Motor	230 – 240 V~
Input	1500 W

LOGISTICAL DATA

Weight net / gross	20.5 / 24 kg
Packaging dimensions	655 x 520 x 370 mm
Article number	4902105901
Barcode	4046664037798
20 Container	220 pcs
40 Container	440 pcs
40 HQ Container	500 pcs

HF60

BENCHTOP SHAPER / ROUTER

- **Compact tabletop model**
- **Variable speed control from 11500 to 24000 rpm**
- **Collets with diameters of 6, 8 and 12 mm**
- Powerful **1500-watt engine**
- Comes with angular stop and large aluminium stops as standard
- Table width extensions on both sides, **table size 610 x 360 mm**
- **Spindle height adjustable from 0 to 40 mm**

Infinitely variable height adjustment

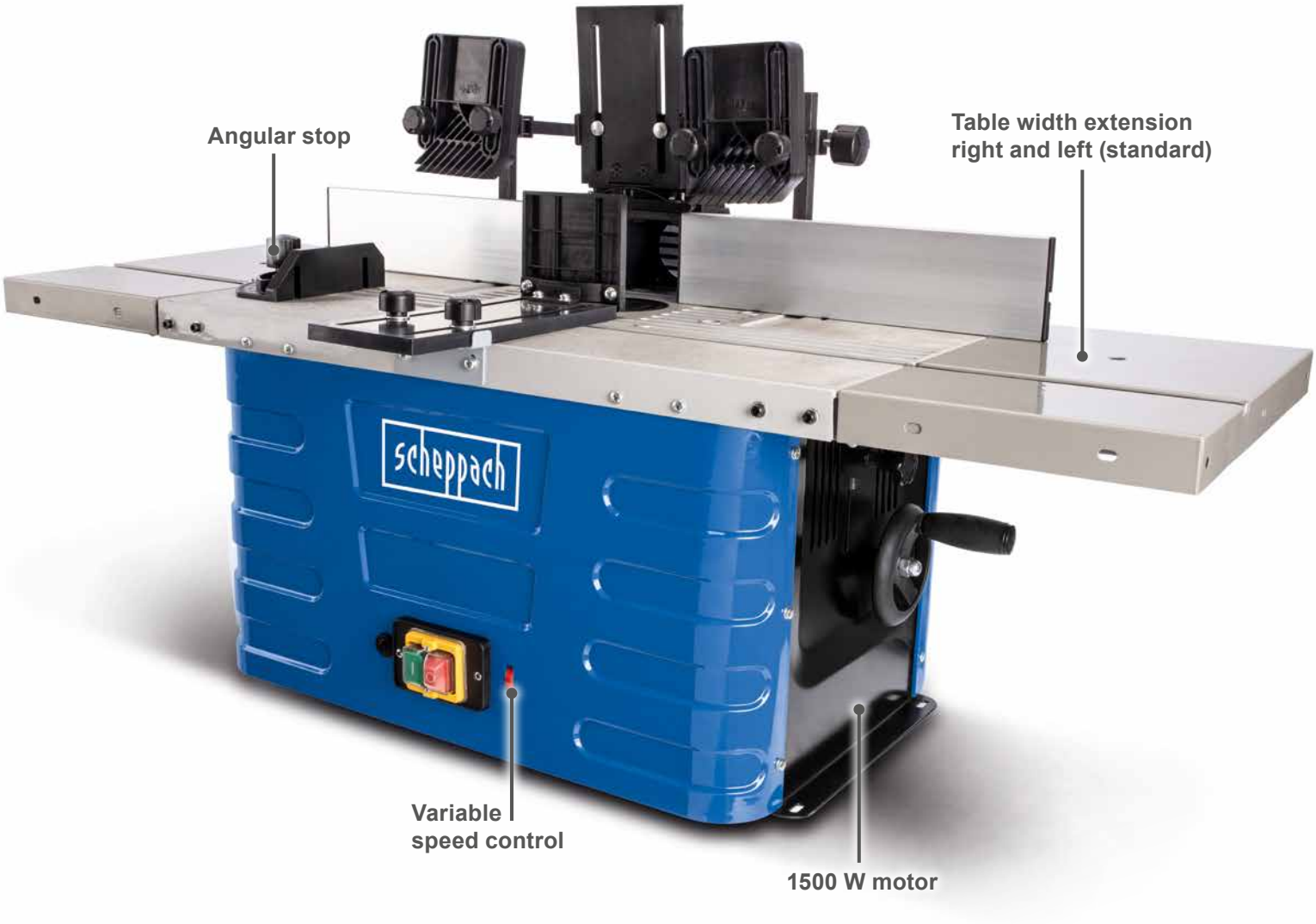

SPECIFICATIONS

Dimensions L x W x H	1030 x 450 x 530 mm
Table size	610 x 360 mm
Speed	11500 – 24000 rpm
Spindle height	0 – 40 mm
Table inserts	32 / 47.5 / 55 / 75 mm
Motor	230 – 240 V~ / 50 Hz
Input	1500 W

LOGISTICAL DATA

Weight net / gross	20.5 / 24 kg
Packaging dimensions	670 x 535 x 390 mm
Article number	5902106901
Barcode	4046664137771
20 Container	192 pcs
40 Container	408 pcs
40 HQ Container	408 pcs

8" PLANER / THICKNESSER

- **Combined planer thicknesser** for small workshops
- Powerful **1250 W motor** for versatile use
- Compact table model
- **Two high-speed planer knives for smooth and precise planing**
- Vibration-absorbing rubber feet for secure positioning
- **Easy height adjustment using hand crank**

OPTIONAL ACCESSORIES

HSS PLANER KNIVES
Two-piece set

Article number: 3902202701
Barcode: 4046664000310

2IN1

✓ Planing
✓ Thicknessing

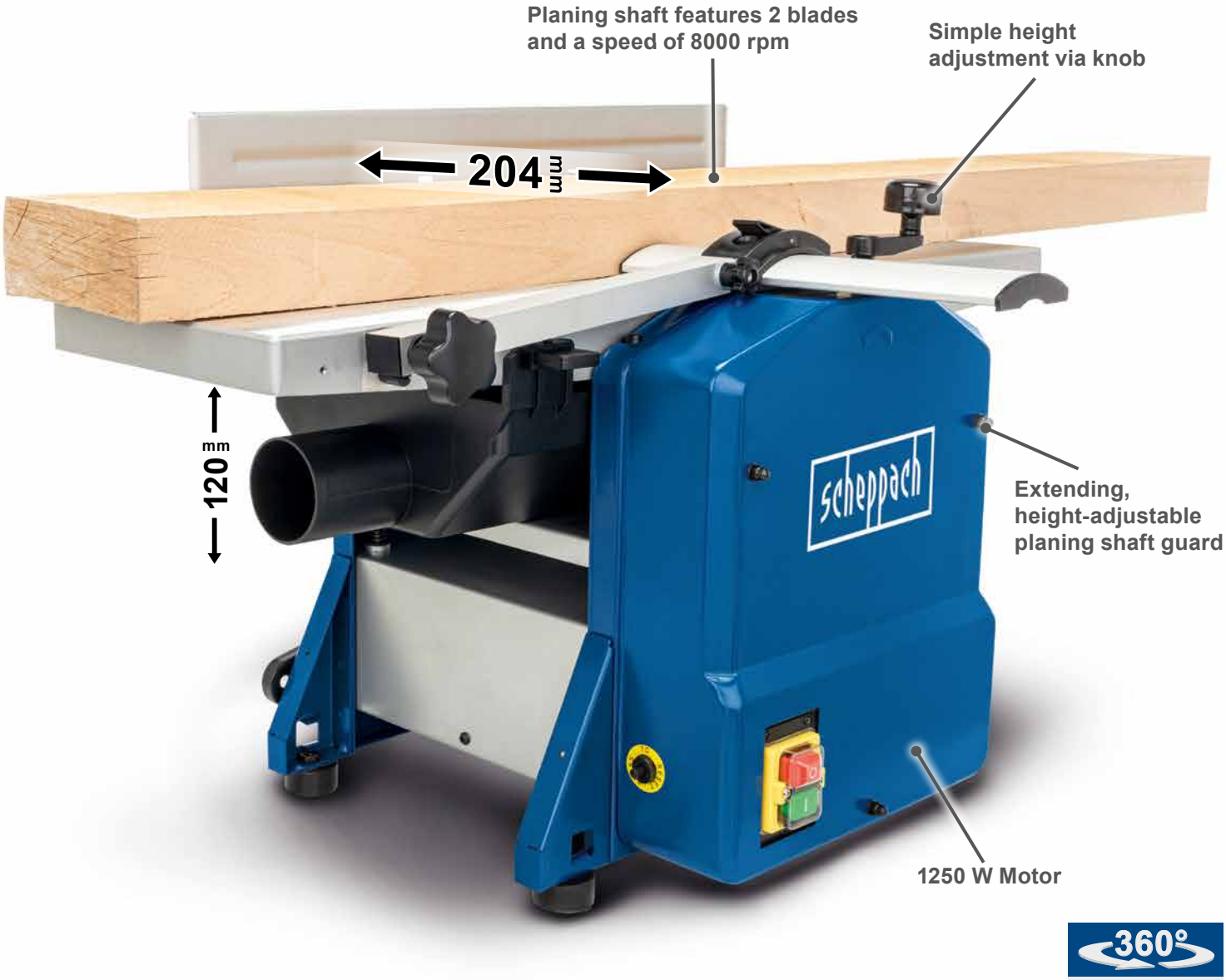

360°

SPECIFICATIONS

Dimensions L x W x H	780 x 440 x 455 mm
Surfacing table size	737 x 210 mm
Thicknessing table size	350 x 204 mm
Number of blades	2
Planing shaft speed	8000 rpm
SURFACE PLANING	
Plane width max.	204 mm
Stock removal max.	2 mm
THICKNESSING	
Thickness capacity / width max.	120 / 204 mm
Stock removal max.	2 mm
Motor	230 V~ / 50 Hz
Input	1250 W

LOGISTICAL DATA

Weight net / gross	23 / 25 kg
Packaging dimensions	830 x 465 x 440 mm
Article number	5902205901
Barcode	4046664037477
20 Container	175 pcs
40 Container	350 pcs
40 HQ Container	420 pcs

HMS860

8" PLANER / THICKNESSER

- Combined **planer thicknesser**
- High-performance **1500 W motor** for effortless planing and thicknessing
- Compact table model with a **thickness capacity / width of 120 and 204 mm**
- Two high-speed steel planer knives and a blade speed of 9000 rpm for smooth and precise planing
- Planer fence for precise angles of **90° to 135°**
- Vibration-absorbing rubber feet for sturdy positioning
- Precise height adjustment of the **thicknesser table using hand crank**

OPTIONAL ACCESSORIES

HSS PLANER KNIVES
Two-piece set

Article number: 3902202701
Barcode: 4046664000310

2IN1

✓ Planing
✓ Thicknessing

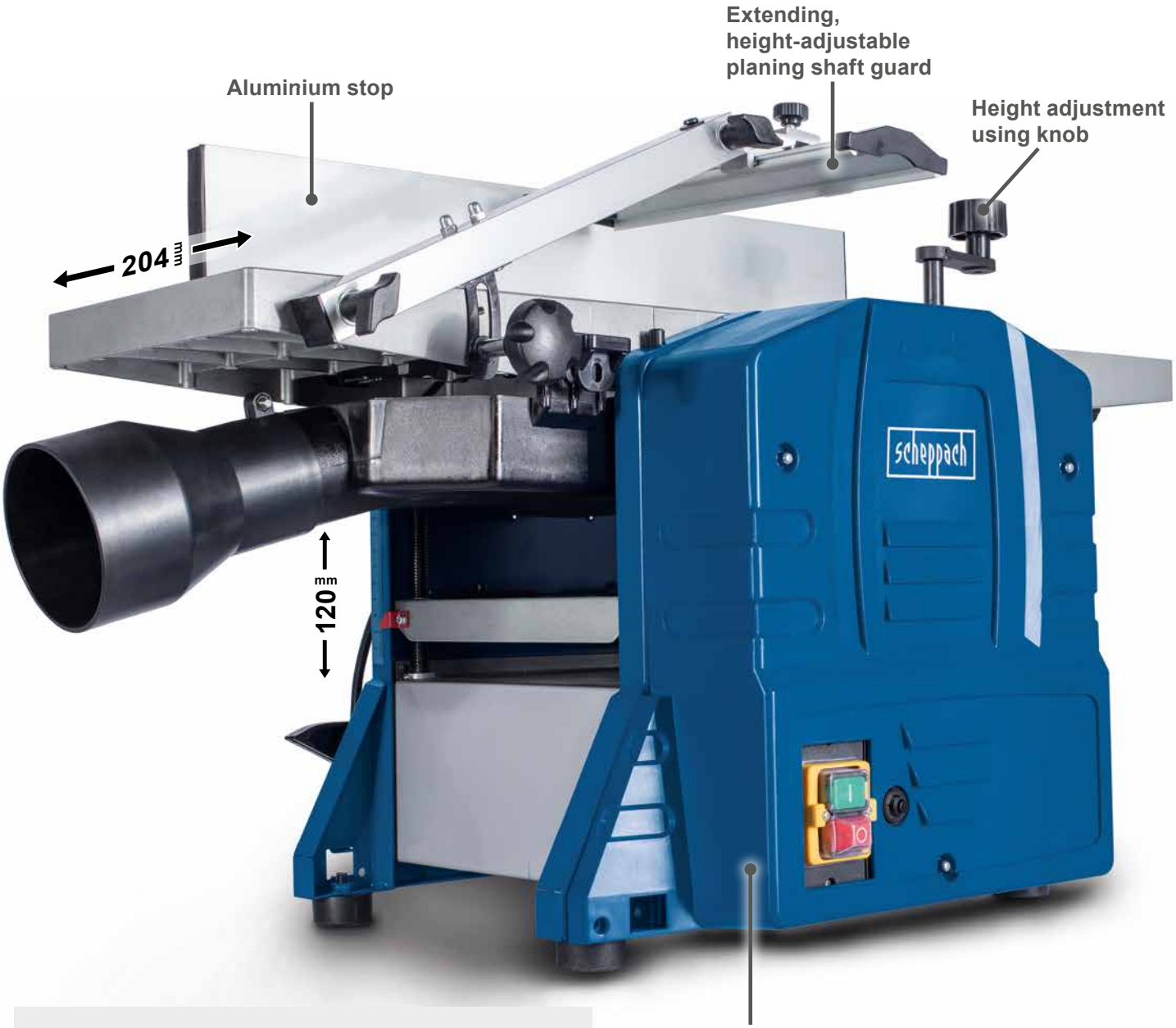

SPECIFICATIONS

Dimensions L x W x H	770 x 435 x 460 mm
Surfacing table size	740 x 213 mm
Thicknessing table size	270 x 250 mm
Number of blades	2
Planing shaft speed	9000 rpm
SURFACE PLANING	
Plane width max.	204 mm
Stock removal max.	2.5 mm
THICKNESSING	
Thickness capacity / width max.	120 / 204 mm
Stock removal max.	2.0 mm
Motor	230 – 240 V~ / 50 Hz
Input	1500 W

LOGISTICAL DATA

Weight net / gross	24 / 29 kg
Packaging dimensions	850 x 455 x 430 mm
Article number	5902210901
Barcode	4046664087632
20 Container	160 pcs
40 Container	320 pcs
40 HQ Container	419 pcs

10" PLANER / THICKNESSER

- Combined **planer thicknesser for small workshops**
- Powerful 1500 W motor for versatile use
- Compact table model with a thickness capacity / width of **120 and 254 mm**
- Planer fence for precise angles of **90° to 135°**
- **Two high-speed planer knives** for smooth, precise planing
- **Easy height adjustment** using knob

OPTIONAL ACCESSORIES

HSS PLANER KNIVES
Two-piece set

Article number: 3902203701
Barcode: 4046664001881

2IN1

✓ Planing
✓ Thicknessing

360°

SPECIFICATIONS

Dimensions L x W x H	960 x 460 x 485 mm
Surfacing table size	920 x 264 mm
Thicknessing table size	380 x 254 mm
Number of blades	2
Planing shaft speed	8500 rpm
SURFACE PLANING	
Plane width max.	254 mm
Stock removal max.	2 mm
THICKNESSING	
Thickness capacity / width	120 / 254 mm
Stock removal max.	2 mm
Motor	230 V~ / 50 Hz
Input	1500 W

LOGISTICAL DATA

Weight net / gross	26 / 30.5 kg
Packaging dimensions	1020 x 525 x 445 mm
Article number	5902206901
Barcode	4046664015253
20 Container	110 pcs
40 Container	230 pcs
40 HQ Container	276 pcs

HMS1080

10" PLANER / THICKNESSER

- **Combined planer thicknesser** for small workshops
- High-performance **1500 W motor** for effortless planing and thicknessing
- Compact table model with an **with a thickness capacity / width of 120 / 254 mm**
- Two high-speed steel planer knives and apPlaning shaft speed of 9000 rpm for smooth and precise planing
- **Easy height adjustment** of the thicknesser table using hand crank
- Planer fence with **45° angle adjustment for precise angles of 90° to 135°**
- Vibration-absorbing rubber feet for sturdy positioning

OPTIONAL ACCESSORIES

HSS PLANER KNIVES
Two-piece set

Article number: 7902200608
Barcode: 4046664076582

2IN1

✓ Planing
✓ Thicknessing

SPECIFICATIONS

Dimensions L x W x H	950 x 460 x 460 mm
Surfacing table size	920 x 264 mm
Thicknessing table size	350 x 270 mm
Number of blades	2
Planing shaft speed	9000 rpm
SURFACE PLANING	
Plane width max.	254 mm
Stock removal max.	2 mm
THICKNESSING	
Thickness capacity / width max.	120 / 254 mm
Stock removal max.	2 mm
Motor	230 – 240 V~ / 50 Hz
Input	1500 W

LOGISTICAL DATA

Weight net / gross	27 / 33 kg
Packaging dimensions	1020 x 525 x 445 mm
Article number	5902209901
Barcode	4046664073734
20 Container	116 pcs
40 Container	244 pcs
40 HQ Container	305 pcs

12" THICKNESSER

- High-performance 1500 W motor
- **Powerful feed mechanism** ensures easy work
- Compact, yet high-performance table model with handles for easy transport
- **Thickness capacity / width of 152 / 330 mm**
- Two high-speed steel planer knives and a blade speed of 8500 rpm for smooth and precise planing
- Comfortable **height adjustment using hand crank and measurement scale**
- Steel plate thicknessing table with extension 330 x 630 mm
- **Feed speed of 7.4 m/min for quick progress**
- **Diameter of the cutter 48 mm, 2 planer knives**
- Dustproof on/off safety switch

selber machen
PRAXISTEST
SEHR GUT
scheppach
PLM1800
Heft 09/21

Dickenhobel: Scheppach PLM1800
WORLD TOOL AWARDS
WINNER
BEST BUY
2021

OPTIONAL ACCESSORIES

HSS PLANER KNIVES
Two-piece set

Article number: 7902200607
Barcode: 4046664073666

360°

LOGISTICAL DATA

Weight net / gross	30.5 / 33 kg
Packaging dimensions	630 x 410 x 480 mm
Article number	5902208901
Barcode	4046664073659
20 Container	240 pcs
40 Container	480 pcs
40 HQ Container	510 pcs

SPECIFICATIONS

Dimensions L x W x H	630 x 580 x 500 mm
Number of blades	2
Motor speed	21000 rpm
Cutterblock speed	8500 rpm
Clearence depth / width max.	152 mm / 330 mm
Stock removal max.	2.8 mm
Motor	230 V~ / 50 Hz
Input	1500 W

HD2P

3 IN 1

- ✓ Extractor
- ✓ Vacuum cleaner
- ✓ Inflator

360°

OPTIONAL ACCESSORY

DUST BAG

Article number: 3906307701
Barcode: 4046664026181

INCLUDED

Is identical with HD2P

Scheppach ha 200s
Oberklasse
Heimwerker Praxis 1/2014
Preis/Leistung: gut - sehr gut
1,5

SPECIFICATIONS

Dimensions L x W x H	435 x 345 x 230 mm
Air capacity	120 m³/h
Filling capacity	5 L
Filter size	350 x 250 mm
Hose Ø / length	40 / 2000 mm
Filter rating	3 µm
Motor	220 - 240 V~ / 50/60 Hz
Input	1250 W

DUST EXTRACTION SYSTEM

- **High-performance 1250 W Motor**
- **Comprehensive set of accessories**, can be stowed conveniently in its case
- **Flat nozzle, drilling aid attachment and inflation nozzle** for versatile use
- **Shatterproof plastic housing**
- Comfortable transport handle
- **Perfect for DIY and trade**

LOGISTICAL DATA

Weight net / gross	5 / 6.5 kg
Packaging dimensions	475 x 385 x 245 mm
Article number	5906301901
Barcode	4046664023616
20 Container	648 pcs
40 Container	1350 pcs
40 HQ Container	1500 pcs

Optional accessories can be found on page 59

65 L DUST EXTRACTION SYSTEM

- Clean air thanks to the **5 micron filtration**
- **Compact and light**, making it easy to store and to transport
- **100 mm hose connection incl. a four-piece adapter set** for all small devices
- Robust metal container with handle
- **Filter cartridge and four paper filters included**
- Powerful **1200 W motor**

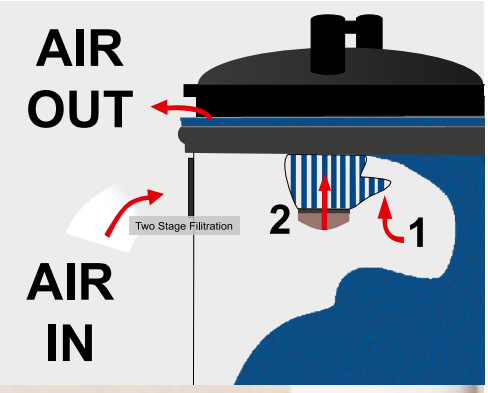

5 MICRON

μ

FILTER POWER

selber machen
PRAXISTEST
GUT
★★★★
scheppach
DC100
Heft 09/21

SPECIFICATIONS

Dimensions L x W x H	400 x 400 x 750 mm
Suction connector Ø	100 mm
Hose length	2000 mm
Air power	215 m³/h
Vacuum max.	25 kPa
Filter surface	0.3 m²
Container	65 L
Motor	220 - 240 V~ / 50/60 Hz
Input	1200 W

LOGISTICAL DATA

Weight net / gross	6 / 8 kg
Packaging dimensions	405 x 405 x 710 mm
Article number	5906306901
Barcode	4046664123132
20 Container	252 pcs
40 Container	522 pcs
40 HQ Container	582 pcs

Optional accessories can be found on page 59

DC500

75 L DUST EXTRACTION SYSTEM

- Flexible **extraction hose of 2 metres with a connection hose diameter of 100 mm**
- **Incl. a four-piece adapter set** for all small devices
- Robust metal frame with a bracket for hanging the filter bag
- **A large collection bag with 75 litres** minimises emptying
- Designed for **large amounts of dust and chips**
- Easy to transport thanks to **wheel kit**

Wheels

2 metres connection hose

SPECIFICATIONS

Dimensions L x W x H	650 x 446 x 1430 mm
Suction connector Ø	100 mm
Hose length	2000 mm
Air power	1150 m³/h
Partial vacuum	900 Pa
Filter area	ca. 1m²
Filling capacity	75 L
Motor	220 - 240 V~ / 50 Hz
Input	550 W

LOGISTICAL DATA

Weight net / gross	14 / 16 kg
Packaging dimensions	750 x 460 x 420 mm
Article number	5906307901
Barcode	4046664127413
20 Container	190 pcs
40 Container	390 pcs
40 HQ Container	465 pcs

Optional accessories can be found on page 59

HD2P

	Description	Article number	Barcode
1 Dust bag		3906307701	4046664026181

1

DC100

	Description	Article number	Barcode
3 Adapter kit		75200703	4014915096221
4 HEPA filter		7906300706	4014915229186
5 Dust bag kit	5 pcs	7906300705	4014915229179

3

4

5

DC500

	Description	Article number	Barcode
1 Flat cleaning nozzle	Flat, for cleaning machine and area, connector diameter 100 mm, suction port 140 x 30 mm	75206003	4014915018230
2 Hose extension coupling	Ø 100 mm, incl. 2 hose clamps	75003300	4014915017905
3 Filter bag needle felting		3906301013	4046664003762
4 Dust bags	1000 x 550 mm, transparent, Set = 20 pcs	75001500	4014915017837
5 Adapter kit		75200703	4014915096221

1

2

3

4

5

	Description	Article number	Barcode
1 Flexible vacuum adapter	7-steps 35 – 150 mm	7906300703	4046664069454

1

HDA-14

HEAVY DUTY AIR FILTER

- Extremely **energy-saving 110 watt motor**
- **Air power 740 m³/h**
- Ultra-quiet operation with **max. 60 dB**
- **Filtration of fine dust particles and aerosols of up to 1 µm**
- **Three different settings** to ideally adapt to current requirements
- **Timer for run-on and automatic switch-off**
- Suitable for **workplaces of up to 400 m²**
- Can be conveniently and space-savingly mounted under the ceiling
- **Practical remote control is included**

OPTIONAL ACCESSORY

INTERNAL AIR FILTER

Order No: 7903000701
Barcode:
4014915229377

EXTERNAL AIR FILTER

Order No: 7903000702
Barcode:
4014915229384

AIR FILTER SET

Order No: 7903000703
Barcode:
4014915229391

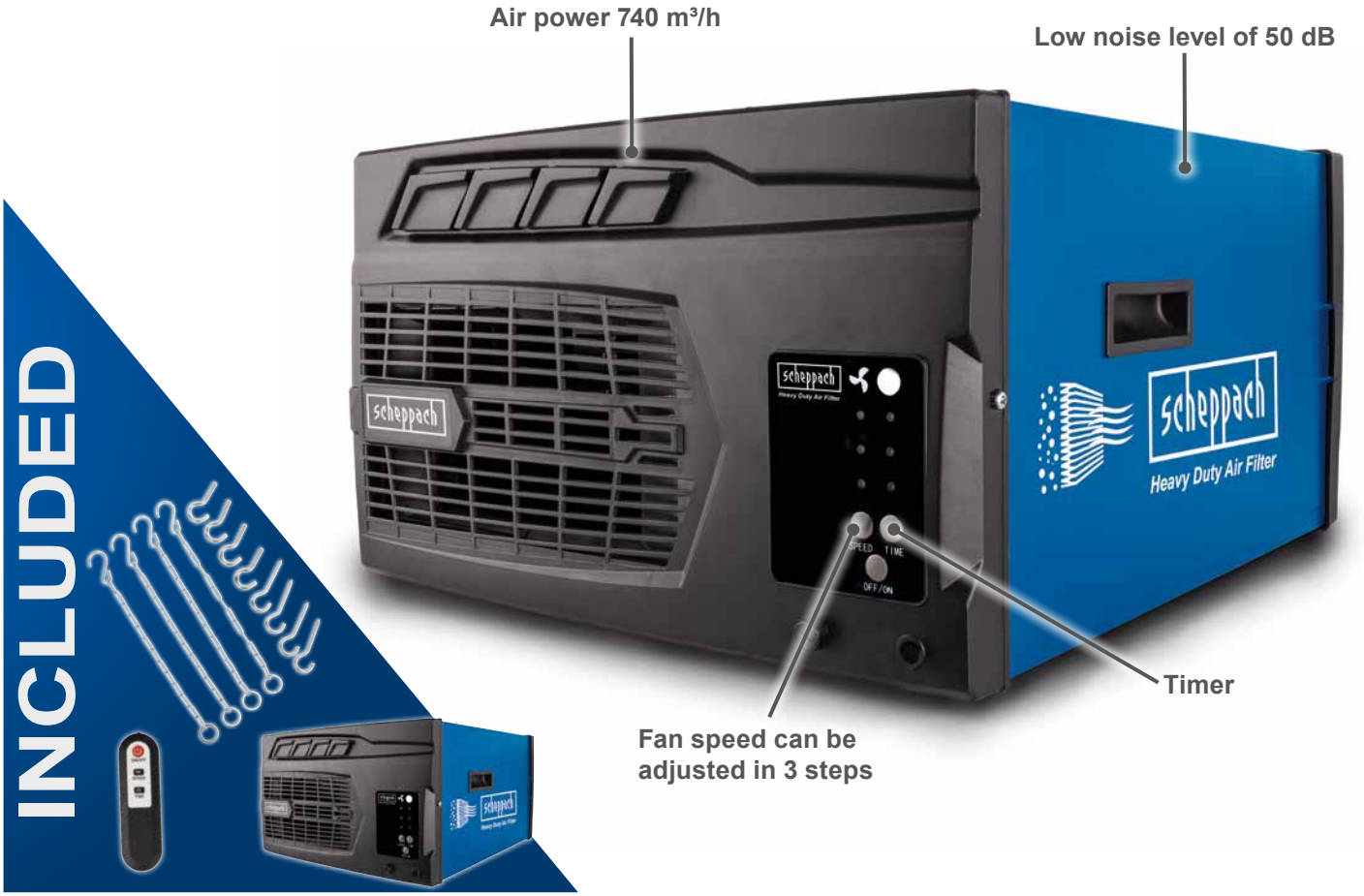

SPECIFICATIONS

Dimensions L x W x H	495 x 435 x 265 mm
Air flow	600m³/h / 675m³/h / 740m³/h
Adjustable switch-off times	60 min / 120 min / 240 min
Filter surface plate filter	0,1 m²
Filter surface internal filter	0,1 m²
Volume	50dB / 55dB / 60dB
Motor	220 – 240 V~
Input	110 W

LOGISTICAL DATA

Weight net / gross	8 / 10 kg
Packaging dimensions	575 x 480 x 325 mm
Article number	5903001901
Barcode	4046664129561
20 Container	324 pcs
40 Container	672 pcs
40 HQ Container	768 pcs

WOOD LATHE

- **Compact and transportable wood-turning lathe** with solid steel bed
- Smooth running **400 W induction motor** with 4 speed levels
- **Idle speeds 890 / 1260 / 1760 / 2600 rpm**
- Headstock with M18 thread, including 4-edge live centre
- **Bed height 175 mm**
- Stability thanks to the **weight of 18 kg** to allow vibration-free working
- Tool rest with adjustable support surface
- **Max. size of workpiece 350 x 500 mm**

OPTIONAL ACCESSORY

WOODEN TURNING TOOLS
8-piece-set

Article number: 7902301601
Barcode: 4014915225119

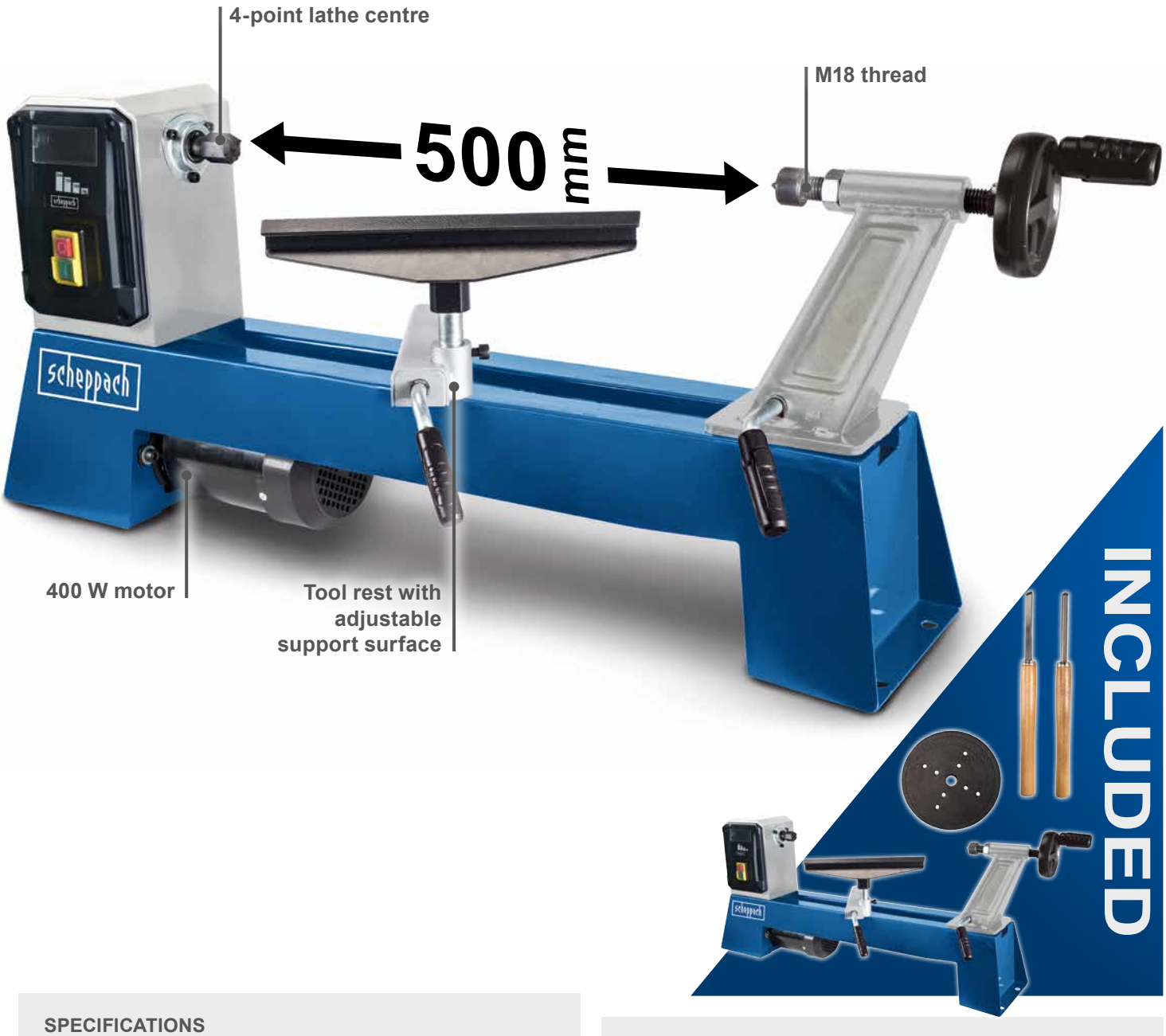

SPECIFICATIONS

Dimensions L x W x H	890 x 325 x 415 mm
Bed height	175 mm
Speed	890 / 1260 / 1760 / 2600 rpm
Spindle head thread	M 18
Max. Ø	350 mm
Distance between centres	500 mm
Motor	230 – 240 V~ / 50 Hz
Input	400 W

LOGISTICAL DATA

Weight net / gross	18 / 19 kg
Packaging dimensions	910 x 305 x 435 mm
Article number	5902307901
Barcode	4046664115137
20 Container	224 pcs
40 Container	455 pcs
40 HQ Container	546 pcs

DM1100T

WOOD LATHE

- **Compact and transportable wood-turning lathe** with solid steel bed
- Smooth running **400 W induction motor** with 4 speed levels
- **Idle speeds 890 / 1260 / 1760 / 2600 rpm**
- Headstock with M18 thread, including 4-edge live centre
- **Bed height 175 mm**
- Stability thanks to the **weight of 20 kg** to allow vibration-free working
- Tool support with adjustable support surface
- **Max. size of workpiece 350 x 1000 mm**

OPTIONAL ACCESSORY

WOODEN TURNING TOOLS
8-piece-set

Article number: 7902301601
Barcode: 4014915225119

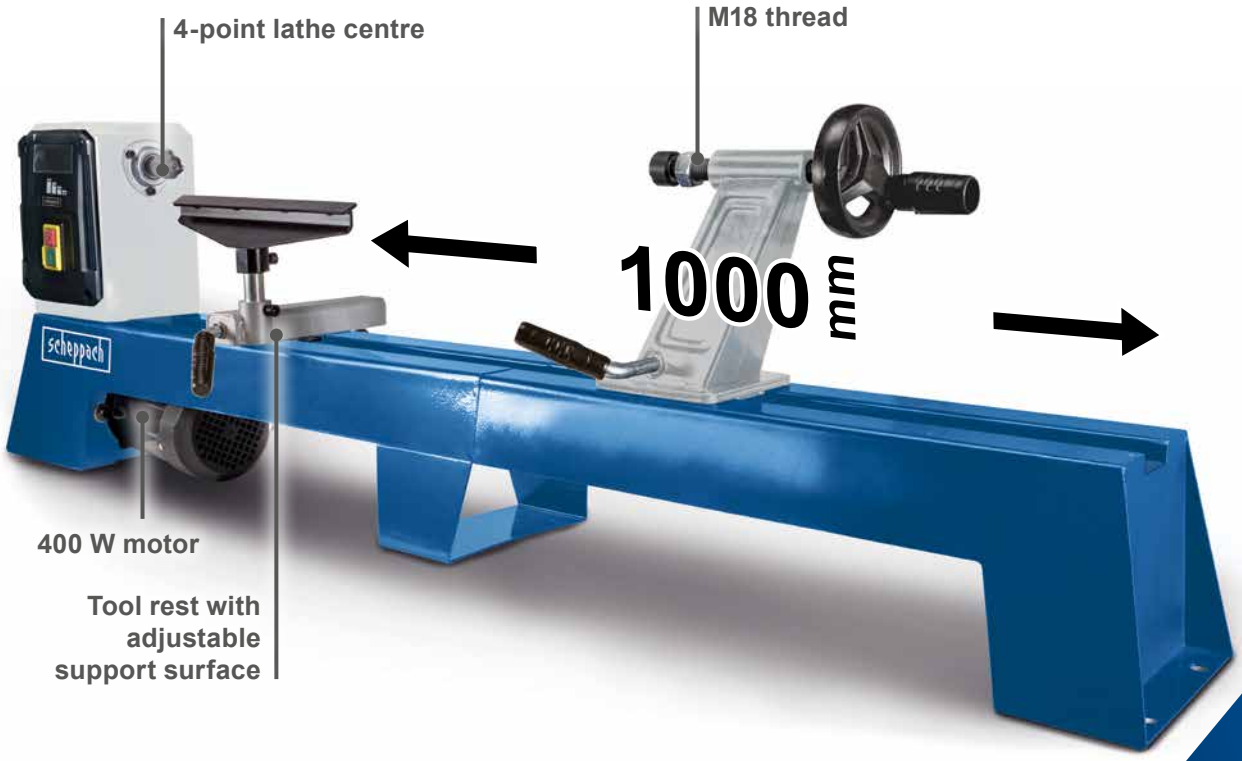

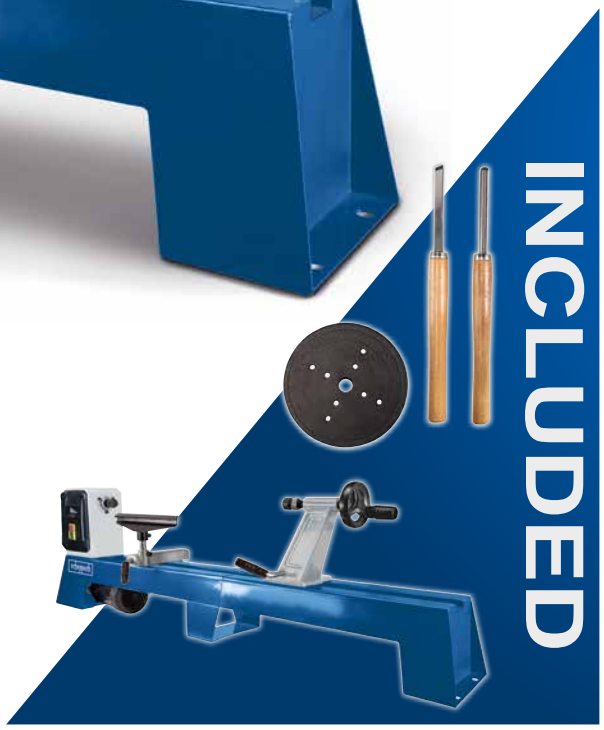

SPECIFICATIONS

Dimensions L x W x H	1375 x 325 x 415 mm
Bed height	175 mm
Speed	890 / 1260 / 1760 / 2600 rpm
Spindle head thread	M 18
Max. Ø	350 mm
Distance between centres	1000 mm
Motor	230 – 240 V~ / 50 Hz
Input	400 W

LOGISTICAL DATA

Weight net / gross	20 / 22 kg
Packaging dimensions	810 x 258 x 415 mm
Article number	5902306901
Barcode	4046664113874
20 Container	280 pcs
40 Container	560 pcs
40 HQ Container	660 pcs

WOOD LATHE

- **Powerful 550 W motor** with stepless electronic speed control
- **Variable speed 800 - 3000 rpm**
- Headstock with M18 thread incl. 4-point lathe centre and face plate
- **Tailstock with quick locking lever and rotating spindle head**
- **Tool rest** with adjustable support surface
- **Includes face plate (Ø 80 mm), 2 open-end wrenches, Material for mounting the work bench**

OPTIONAL ACCESSORY

WOODEN TURNING TOOLS
8-piece-set

Article number: 7902301601
Barcode: 4014915225119

360°

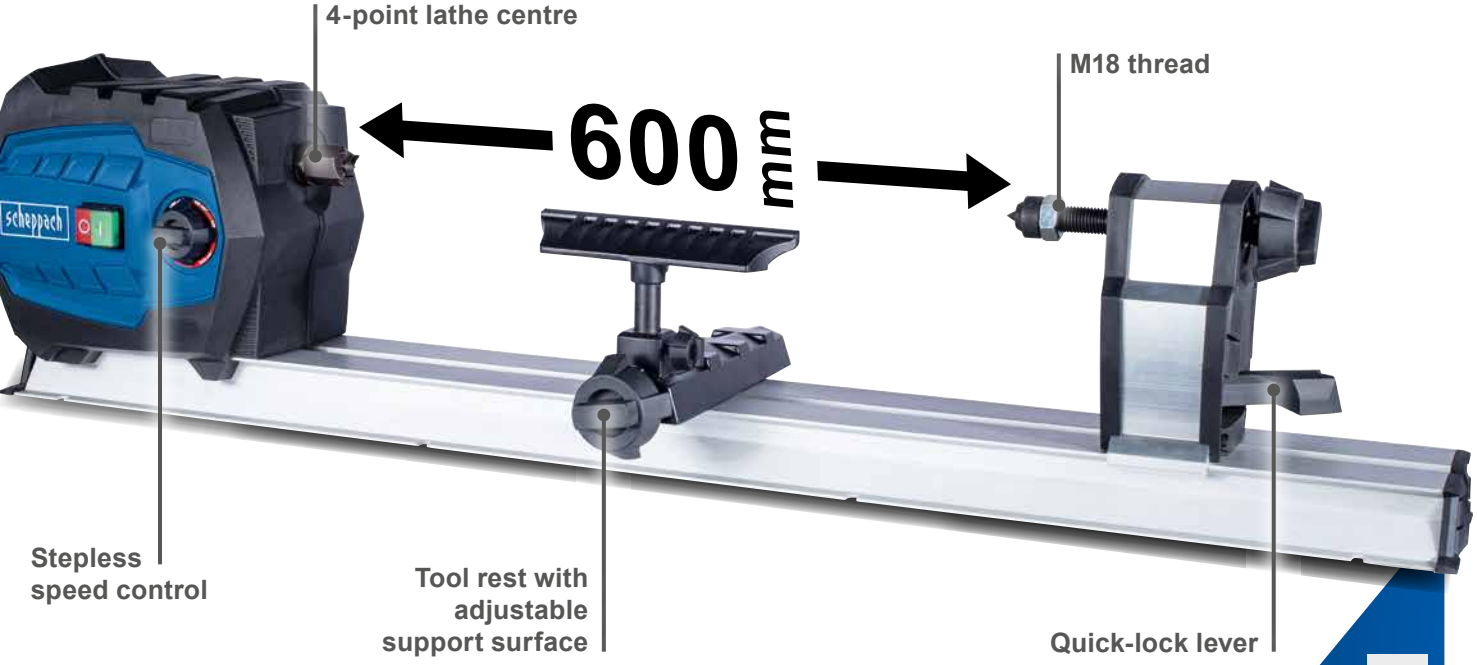

INCLUDED

Face plate Ø 80 mm

SPECIFICATIONS

Dimensions L x W x H	1010 x 154 x 215 mm
Bed height	125 mm
Speed	800 – 3000 rpm
Spindle head thread	M 18
Max. Ø	250 mm
Distance between centres	600 mm
Motor	220 – 240 V~
Input	550 W

LOGISTICAL DATA

Weight net / gross	6.7 / 8. 6 kg
Packaging dimensions	1020 x 220 x 265 mm
Article number	5902305901
Barcode	4046664090038
20 Container	452 pcs
40 Container	972 pcs
40 HQ Container	1088 pcs

TIGER 2000S

Angle Gauge

Straight edge (Universal Jig)

360°

8" WET GRINDING SYSTEM

- Powerful induction motor provides superior power for long-lasting smooth performance
- **Includes a special corundum grinding stone**
- **Includes universal jig** for straight edges, plane irons, chisels
- **Abrasive paste** for polishing workpiece after sharpening
- **Includes angle gauge** for measuring exact angles and settings
- **Shatterproof water tank**
- **Removable leather honing wheel.** After sharpening, it removes all burrs and creates a smooth and sharp edge

SPECIFICATIONS

Dimensions L x W x H	460 x 270 x 310 mm
Grinding stone dimensions	Ø200 x Ø12 x 40 mm
Stone grit	K 220
Material	corundum grinding stone
Leather honing wheel Ø / width	220 x 30 mm
Rotation speed	120 rpm
Motor	230 - 240 V~ / 50 Hz
Input	120 W

LOGISTICAL DATA

Weight net / gross	8.5 / 10 kg
Packaging dimensions	410 x 330 x 330 mm
Article number	89490916
Barcode	4014915042006
20 Container	684 pcs
40 Container	1400 pcs
40 HQ Container	1601 pcs

Optional accessories can be found on page 68

TIGER 2500

10" WET GRINDING SYSTEM

- Ideal choice for all craftsmen and training workshops
- **Solid, powder-coated casing, splash-proof motor and switch**
- Powerful induction motor provides superior power or long-lasting smooth performance
- **Includes a special corundum grinding stone to achieve the perfect grinding results in less time, also ideal for HSS tools**
- **Includes jig** for straight edges, plane irons, chisels
- **Abrasive paste** for polishing workpiece after sharpening
- **Includes angle gauge** for measuring exact angles and settings
- **Shatter-proof water tank**
- **Removable leather honing wheel**. After sharpening, it removes all burrs and creates a smooth and sharp edge

Universal jig

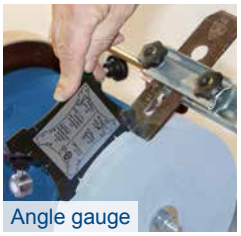
Angle gauge

360°

INCLUDED

SPECIFICATIONS

Dimensions L x W x H	320 x 325 x 335 mm
Grinding stone dimensions	Ø250 x Ø12 x 50 mm
Stone grit	K 220
Material	corundum grinding stone
Leather honing wheel Ø / width	200 x 30 mm
Rotation speed	90 rpm
Motor	230 – 240 V~ / 50 Hz
Input	200 W

LOGISTICAL DATA

Weight net / gross	16 / 18 kg
Packaging dimensions	390 x 380 x 390 mm
Article number	5903202901
Barcode	4046664037491
20 Container	500 pcs
40 Container	1000 pcs
40 HQ Container	1020 pcs

Optional accessories can be found on page 68

TIGER 5000S

8" WET GRINDING SYSTEM

- **150 W strong induction motor**
- Big, **shatterproof water tank** for steady cooling of the grinding stone
- **Honing paste** to polish the grinding pieces
- **Angle gauge** to adjust the correct grinding angle
- **Detachable leather honing wheel** to remove burrs after sharpening
- **Special 200 mm white corundum grinding stone** for perfect grinding results, even with hard steel
- **Including universal Jig designed for many straight standard tools, honing paste and angle gauge**

INCLUDED ACCESSORIES

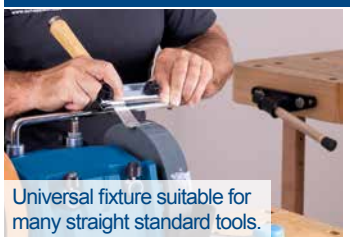

Universal fixture suitable for many straight standard tools.

The angle gauge enables quick configuration of the required grinding angle.

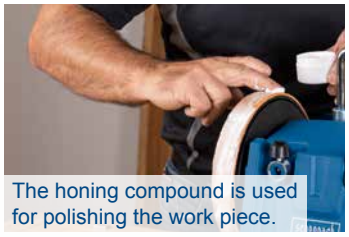

The honing compound is used for polishing the work piece.

SPECIFICATIONS

Dimensions L x W x H	290 x 330 x 270 mm
Grinding stone dimensions	Ø200 x Ø12 x 40 mm
Stone grit	K 220
Leather honing wheel Ø / width	200 x 30 mm
Rotation speed	115 rpm
Motor	230 – 240 V~ / 50 Hz
Input	150 W

LOGISTICAL DATA

Gewicht netto / brutto	9 / 10.5 kg
Packaging dimensions	430 x 370 x 340 mm
Article number	5903205901
Barcode	4046664096221
20 Container	500 pcs
40 Container	1000 pcs
40 HQ Container	1186 pcs

Optional accessories can be found on page 68

TIGER 7000S

10" WET GRINDING SYSTEM

- **Removable leather honing wheel** to remove burrs after sharpening
- **Angle gauge** to adjust the correct grinding angle
- **Honing paste** for polishing
- High-performance **200 W motor**
- **Compensation of vibration and excellent stability, thanks to four rubber feet**
- **Special 250 mm corundum grinding stone** for perfect grinding results, even with hard steel
- **Wide range of accessories: universal jig for many straight standard tools, honing paste, angle gauge and stone dresser**

INCLUDED ACCESSORIES

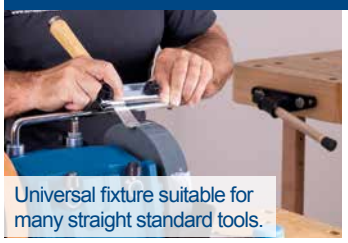

Universal fixture suitable for many straight standard tools.

The angle gauge enables quick configuration of the required grinding angle.

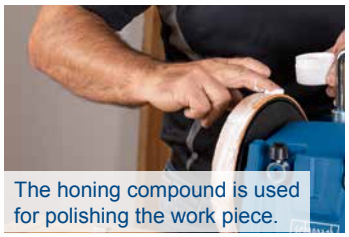

The honing compound is used for polishing the work piece.

SPECIFICATIONS

Dimensions L x W x H	455 x 270 x 355 mm
Grinding stone dimensions	Ø250 x Ø12 x 50 mm
Stone grit	K 220
Leather honing wheel Ø / width	200 x 30 mm
Rotation speed	115 rpm
Motor	230 - 240 V~ / 50 Hz
Input	200 W

LOGISTICAL DATA

Weight net / gross	12 / 14 kg
Packaging dimensions	445 x 375 x 365 mm
Article number	5903206901
Barcode	4046664096245
20 Container	468 pcs
40 Container	935 pcs
40 HQ Container	1127 pcs

Optional accessories can be found on page 68

SHARPENING PACKAGE

HOUSEHOLDING SHARPENING KIT

	Description	Article number	Barcode
Jig 40	For grinding axes with a blade of up to 170 mm	7903200002	4046664036456
Jig 160	Suitable for knives with a blade length from 100 to 200 mm		
Jig 120	For all straight scissors and hedge shears		

WOODTURNER'S SHARPENING KIT

	Description	Article number	Barcode
Jig 55	Grinds oblique edges, hollow chisels and planer blades	7903200001	4046664036449
Jig 110	Ideal for tools that are difficult to clamp		
Stone grader	Changes the grains for particularly fine abrasion, the other side making it rough again		

8" WET GRINDING SYSTEM

- **150 W strong induction motor**
- Big, shatterproof water tank for steady cooling of the grinding stone
- **Honing compound** to polish the grinding pieces
- Angle gauge to adjust the correct grinding angle
- **Detachable leather honing wheel** to remove burrs after sharpening
- **Special 200 mm white corundum grinding stone** for perfect grinding results, even with hard steel
- **Including honing paste, angle gauge, stone grader, axe jig, knife jig 1 and universal jig designed for many straight standard tools**

Shatterproof water tank prevents annealing of the blade.

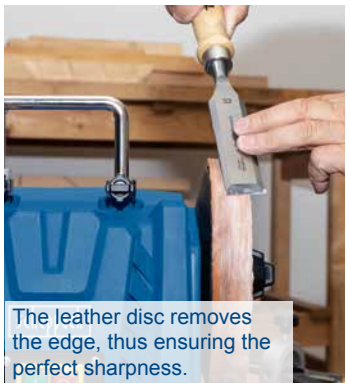

The leather disc removes the edge, thus ensuring the perfect sharpness.

SPECIFICATIONS

Dimensions L x W x H	290 x 330 x 270 mm
Grinding stone dimensions	Ø200 x Ø12 x 40 mm
Stone grit	K 220
Leather honing wheel Ø / width	200 x 30 mm
Rotation speed	115 rpm
Motor	230 – 240 V~ / 50 Hz
Input	150 W

LOGISTICAL DATA

Weight net / gross	9 / 11.5 kg
Packaging dimensions	470 x 370 x 340 mm
Article number	5903205903
Barcode	4046664096238
20 Container	500 pcs
40 Container	1000 pcs
40 HQ Container	1186 pcs

TIGER 7000S HOMEKIT

10" WET GRINDING SYSTEM

- **Removable leather honing wheel** to remove burrs after sharpening
- **Honing paste** for polishing
- High-performance **200 W motor**
- **Compensation of vibration and excellent stability, thanks to four rubber feet**
- **Special 250 mm corundum grinding stone** for perfect grinding results, even with hard steel
- **Wide range of accessories: three grinding fixtures for knives, axes and conventional straight standard tools, honing paste, angle gauge and stone dresser**

Shatterproof water tank prevents annealing of the blade.

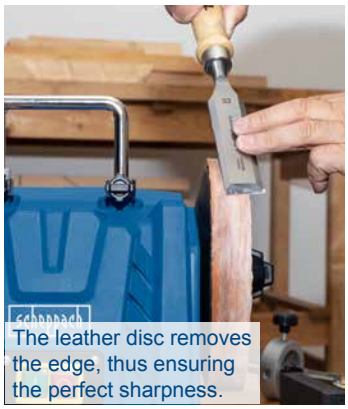

The leather disc removes the edge, thus ensuring the perfect sharpness.

SPECIFICATIONS

Dimensions L x W x H	455 x 270 x 355 mm
Grinding stone dimensions	Ø250 x Ø12 x 50 mm
Stone grit	K 220
Leather honing wheel Ø / width	200 x 30 mm
Rotation speed	115 rpm
Motor	230 – 240 V~ / 50 Hz
Input	200 W

LOGISTICAL DATA

Weight net / gross	12.5 / 15 kg
Packaging dimensions	445 x 375 x 365 mm
Article number	5903206903
Barcode	4046664096160
20 Container	468 pcs
40 Container	935 pcs
40 HQ Container	1127 pcs

	Description	Article number	Barcode	
Axe jig	For grinding axes with a blade of up to 170 mm	89490712	4014915037217	
Planer jig	Grinds oblique edges, hollow chisels, and planer blades	89490706	4014915037156	
Knife jig 1	Suitable for knives from a minimum blade length of 40 mm to 100 mm, and for drawing knives	89490708	4014915037170	
Knife jig 2	Suitable for knives with a blade length from 100 to 200 mm	89490709	4014915037187	
Scissor jig	For all straight scissors and hedge shears	89490710	4014915037194	
Universal jig	Ensures a quick start to sharper work – designed for many straight standard tools	7903200027	4014915229100	
Tool rest	The ideal extension of universal jig 70 – for tools that are difficult to clamp	89490718	4014915037927	

WET GRINDING SYSTEMS

	Description	Article number	Barcode	
Stone grader	Changes the grains for particularly fine abrasion, the other side making it rough again	89490707	4014915037163	
Angle gauge	Makes sure that you always have the correct angle for your tools	200: 89490717 250: 89490704	4014915037910 4014915037132	
Trimming unit	Ensures that the grinding wheel is always round and sharp through ultrahard stripping diamond	89490713	4014915037224	
Honing wheel	For polishing hollow chisels and V-tool surfaces	89490705	4014915037149	
Honing paste	For polishing your work piece after grinding	7903200028	4014915229117	
Grinding wheel Ø 200 mm for TIGER 2000S and TIGER 5000S	Aluminium oxide grinding wheel Ø 200 x 40 x 12 mm, grit 220	89490715	4014915037248	
Grinding wheel Ø 250 mm for TIGER 2500 and TIGER 7000S	Aluminium oxide grinding wheel Ø 250 x 50 x 12 mm, grit 220	89490701	4014915037101	
Wetgrind 250XL for TIGER 3000VS	Aluminium oxide grinding wheel Ø 250 x 62 x 12 mm, grit 220	7903200701	4046664044772	

BG150

360°

BG200W

360°

6" BENCH GRINDER

- High-performance **370 W induction motor** for working quietly and with low vibration
- **Height-adjustable spark protection**
- **Adjustable work piece support**
- Flexible work lamp
- **Grinding stone diameter: 150 mm**

8" WET AND DRY GRINDING MACHINE

- High-performance **250 W induction motor** for working quietly and with low vibration
- **Height-adjustable spark protection**
- **Adjustable work piece support**
- Water container to cool the work piece
- **Wet grinding stone diameter: 200 mm**

LOGISTICAL DATA

	BG150	BG200W
Weight net / gross	10 / 11 kg	12 / 13 kg
Packaging dimensions	440 x 255 x 280 mm	485 x 330 x 360 mm
Article number	4903104901	5903105903
Barcode	4014915082125	4046664037507
20 Container	1050 pcs	500 pcs
40 Container	2200 pcs	1000 pcs
40 HQ Container	2500 pcs	1100 pcs

SPECIFICATIONS

	BG150	BG200W
Dimensions L x W x H	395 x 260 x 310 mm	480 x 280 x 300 mm
Disc size Ø / bore Ø	150 / 25 / 12.7 mm	150 / 20 / 12.7 mm
Wetstone Ø / bore Ø	–	200 / 40 / 20 mm
Sanding disc grit	K36 / K60	K60 / K80
Motor	230 – 240 V~ / 50 Hz	220 – 240 V~ / 50/60 Hz
Input	370 W	250 W

SM150L / SM150LB

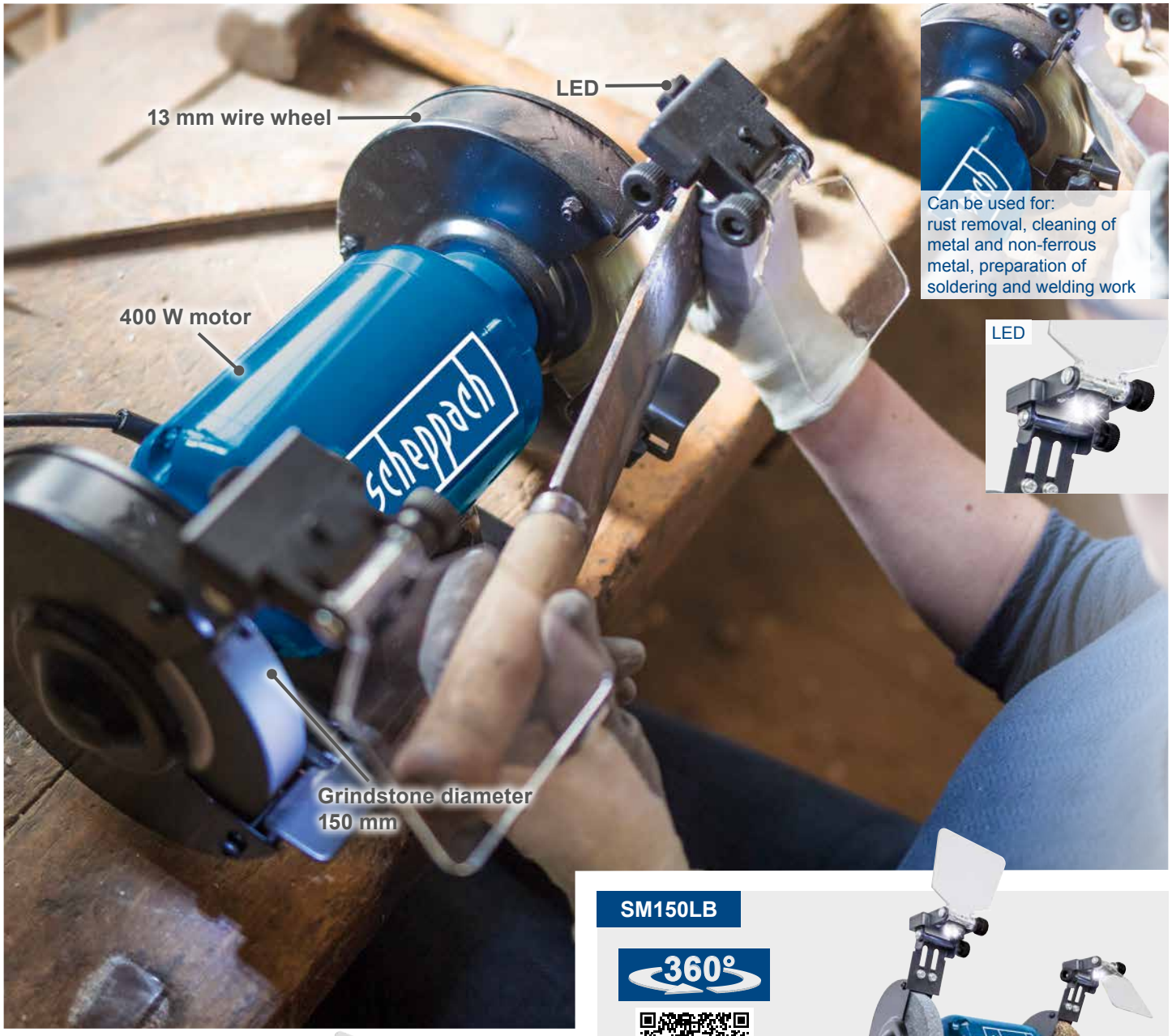

SM150LB

360°

SM150L

360°

6" BENCH GRINDER

- Powerful **0.5 HP motor** delivers smooth, accurate results
- **Grinding / wire brush wheel diameter 150 mm**
- Supplied with one coarse disc and one wire brush wheel (SM150LB) for general workshop grinding and sharpening of metals
- **Eye shields protect you from flying debris without obstructing your view**
- Built-in **LED worklights** over wheels keep work piece lit
- **Steel base** with pre-drilled holes for quick and easy mounting to a benchtop
- Adjustable tool-rests extend the life of the grinding wheels
- **Rubber feet for increased stability**

SPECIFICATIONS

	SM150L	SM150LB
Dimensions L x W x H	380 x 210 x 280 mm	380 x 210 x 280 mm
Disc size Ø / bore Ø	150 / 12.7 / 20 mm	150 / 12.7 / 20 mm
Sanding disc grit	K36 / K60	K36
Speed	2980 rpm	2980 rpm
Motor	230 – 240 V~ / 50 Hz	230 – 240 V~ / 50 Hz
Input	400 W	400 W

LOGISTICAL DATA

	SM150L	SM150LB
Weight net / gross	8 / 9 kg	7.5 / 8.5 kg
Packaging dimensions	390 x 251 x 238 mm	390 x 251 x 238 mm
Article number	5903107901	5903108901
Barcode	4046664064589	4046664064596
20 Container	1100 pcs	1100 pcs
40 Container	2200 pcs	2200 pcs
40 HQ Container	2700 pcs	2700 pcs

SM200L / SM200AL

SM200L

360°

SM200AL

360°

8" BENCH GRINDER

- Powerful **0.5 HP motor** delivers smooth, accurate results
- **Grinding / polishing wheel diameter 200 mm**
- Eye shields protect you from flying debris without obstructing your view
- **Medium and coarse wheels** for a variety of materials
- Built-in **LED worklights** over wheels keep work piece lit
- **Cast aluminium frame** with pre-drilled holes for quick and easy mounting to a benchtop
- Adjustable tool-rests extend the life of the grinding wheels
- Rubber feet for increased stability

SPECIFICATIONS

	SM200L	SM200AL
Dimensions L x W x H	390 x 260 x 290 mm	410 x 260 x 290 mm
Disc size diameter / bore diameter	200 / 15.9 / 20 mm	200 / 15. 9 / 20/40 mm
Sanding disc grit	K36 / K60	K60 / K100
Speed	2980 rpm	2980 rpm
Motor	230 – 240 V~ / 50 Hz	230 – 240 V~ / 50 Hz
Input	500 W	500 W

LOGISTICAL DATA

	SM200L	SM200AL
Weight net / gross	12 / 13.5 kg	13.5 / 14.5 kg
Packaging dimensions	430 x 330 x 310 mm	445 x 335 x 310 mm
Article number	5903109901	5903110901
Barcode	4046664064602	4046664064657
20 Container	670 pcs	640 pcs
40 Container	1300 pcs	1220 pcs
40 HQ Container	1490 pcs	1400 pcs

SM200LB

8" BENCH GRINDER

- Powerful **500 W induction motor**
- **Grinding disc with a width of 20 mm / wire brush with a width of 16 mm**
- Ideal for all grinding and sharpening work
- Transparent and **adjustable spark guard**
- **LED work lamps** above the grinding discs which perfectly illuminate the work area
- **Frame made of aluminium cast iron** which can be attached to the workbench
- **Adjustable workpiece support made of steel**
- **Supporting feet for increased stability**

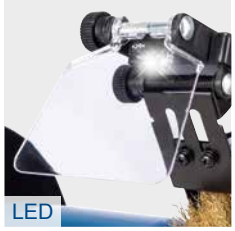

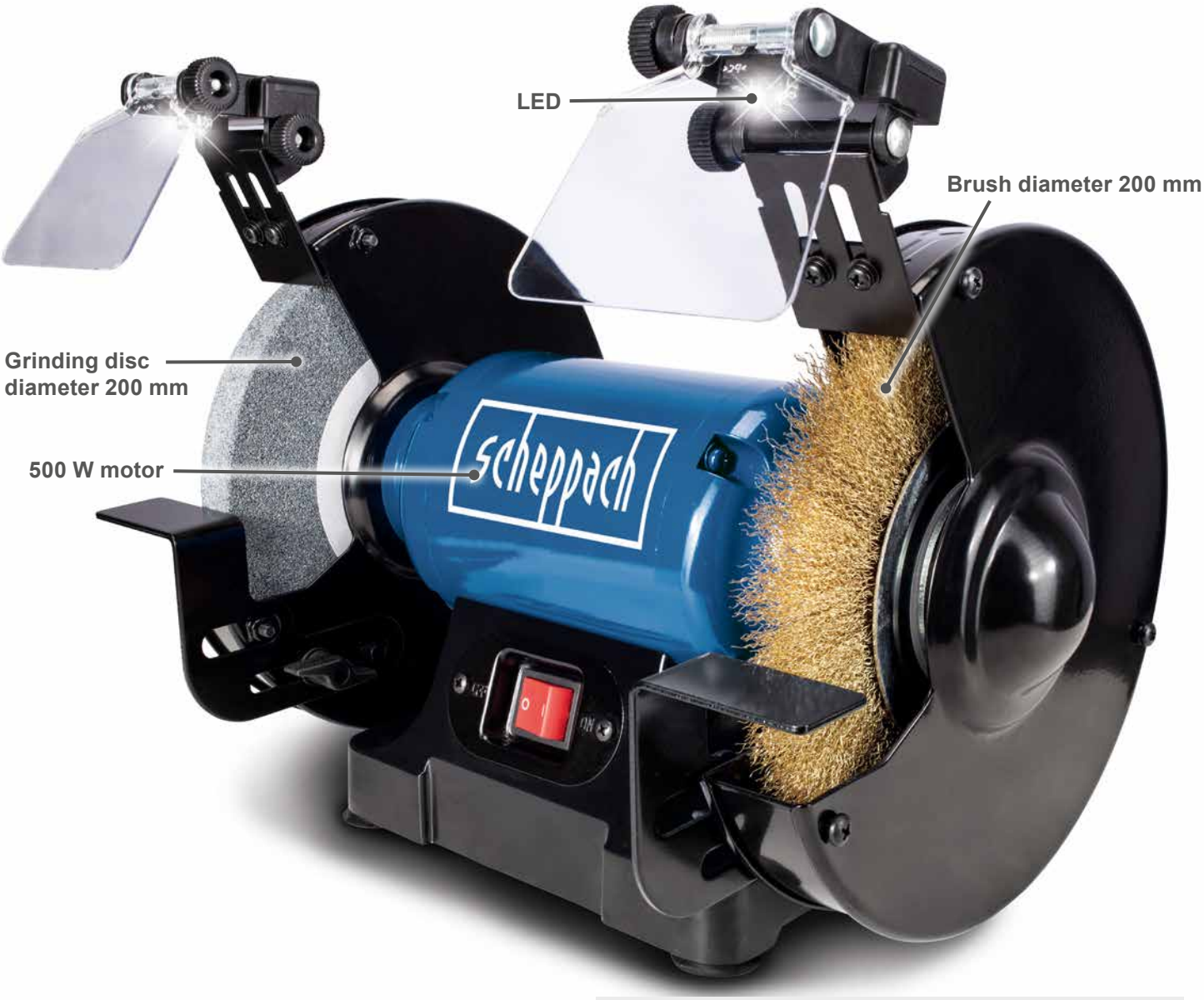

SPECIFICATIONS

Dimensions L x W x H	390 x 260 x 290 mm
Grindstone diameter / width	200 x 15.9 x 20 mm
Disc grit	36
Speed	2980 rpm
Motor	230 – 240 V~
Motor power	500 W

LOGISTICAL DATA

Net / gross weight	11.5 / 13 kg
Packaging dimensions	430 x 330 x 310 mm
Article number	5903111901
Barcode	4046664123712
20 container	670 pcs
40 container	1300 pcs
40 HQ container	1490 pcs

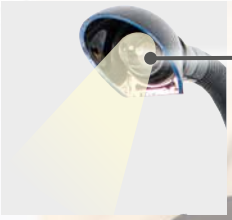

BG200

360°

BG200AL

360°

SPECIFICATIONS

	BG200	BG200AL
Dimensions L x W x H	440 x 280 x 340 mm	440 x 300 x 340 mm
Disc size diameter / bore diameter	200 / 15.88 / 25 mm	200 / 15.88 / 40 mm
Sanding disc grit	36 / 60	60 / 100
Motor	230 – 240 V~	230 – 240 V~
Input	550 W	550 W

8" BENCH GRINDER

- High-performance **550 W induction motor** for working quietly and with low vibration
- Height-adjustable spark protection
- **Adjustable work piece support**
- Flexible work lamp
- **Grinding stone diameter: 200 mm**

LOGISTICAL DATA

	BG200	BG200AL
Weight net / gross	15.2 / 16.5 kg	16.5 / 18 kg
Packaging dimensions	480 x 345 x 320 mm	480 x 340 x 320 mm
Article number	4903105901	4903106901
Barcode	4014915082132	4014915082583
20 Container	560 pcs	535 pcs
40 Container	1120 pcs	1070 pcs
40 HQ Container	1200 pcs	1150 pcs

HG35

BENCH GRINDER WITH FLEXIBLE SHAFT

- Compact tabletop model with **120 W motor**
- **Two 75 x 20 mm discs** for grinding and polishing
- **Continuously adjustable speed 0 – 11000 rpm**
- **1 m flexible shaft** for precision work
- Adjustable spark protection
- Stable owing to non-slip suction pads, optional table mounting
- Base plate with drill holes (assembly material not included in the delivery contents)
- **103 parts accessory set in a handy wooden case**

LOGISTICAL DATA

Weight net / gross	2.3 / 2.7 kg
Packaging dimensions	250 x 160 x 155 mm
Article number	5903112901
Barcode	4046664139829
20 Container	4100 pcs
40 Container	8500 pcs
40 HQ Container	9900 pcs

SPECIFICATIONS

Dimensions L x W x H	250 x 110 x 130 mm
Grindstone / polishing wheel diameter	Ø75 x Ø10 x 20 mm
Grain (grindstone / polishing wheel)	K120 / K400
Speed	0 – 11000 rpm
Motor	230- 240 V / 50 Hz
Input	120 W

BGS700

INDUCTION-MOTOR

OPTIONAL ACCESSORIES

SANDING BELT SET

Article number: 7903303701
Barcode: 4014915098218

COMBINATION GRINDING MACHINE

- Powerful **370 W induction motor** to allow quiet working at a low vibration level
- **Grinding wheel diameter 150 mm** with adjustable spark screen
- **Grinding belt size 50 x 686 mm**
- Adjustable workpiece support for precise work
- Flexible work light for clear sight
- **Including grinding wheel dresser** to remove burrs and impurities from the grinding wheel after intensive use

SPECIFICATIONS

Dimensions L x W x H	405 x 305 x 355 mm
Sanding belt length / width	686 x 50 mm
Belt speed	15.6 m/s
Motor	230 – 240 V / 50 Hz
Input	370 W

LOGISTICAL DATA

Weight net / gross	10 / 11.5 kg
Packaging dimensions	440 x 395 x 255 mm
Article number	4903303901
Barcode	4014915082149
20 Container	760 pcs
40 Container	1400 pcs
40 HQ Container	1500 pcs

Optional accessories can be found on page 85

BTS700

360°

Supporting table can be tilted

Adjustable cross stop

250 W motor

Sanding disc diameter 125 mm

SPECIFICATIONS

Dimensions L x W x H	365 x 300 x 395 mm
Sanding belt length / width	762 / 25.4 mm
Belt speed	860 m/min
Sanding disc diameter	125 mm
Table size	148 mm (Linisher) 187 x 98 mm (Disc)
Table tilt	90° – 45° (Disc)
Motor	230 – 240 V
Input	250 W

BELT AND DISC SANDER

- **250 W high-performance induction motor** for working quietly and with low vibration
- **Solid aluminium cast iron construction** allows sufficiently high contact pressure for consistent, precise sanding results
- **Sanding disc with Velcro fastener** for easy replacement of sanding paper
- Adjustable cross stop
- Supporting table can be tilted
- **Sanding disc with a diameter of 125 mm**

LOGISTICAL DATA

Weight net / gross	7.5 / 9 kg
Packaging dimensions	445 x 315 x 300 mm
Article number	4903304901
Barcode	4046664037712
20 Container	630 pcs
40 Container	1260 pcs
40 HQ Container	1350 pcs

Optional accessories can be found on page 85

BTS800

INDUCTION-MOTOR

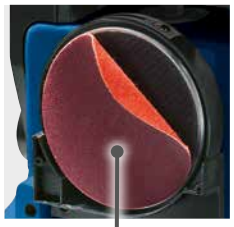

Horizontal and vertical sanding belt

Sanding disc with velcro fastener

SPECIFICATIONS

Dimensions L x W x H	470 x 365 x 295 mm
Sanding belt length / width	915 / 100 mm
Sanding disc	150 mm
Table adjustment	90° – 45°
Belt speed	450 m/min
Sanding disc speed	2980 rpm
Suction connector diameter	63 mm
Motor	230 – 240 V~ / 50 Hz
Input	370 W

Sieger Preis-Leistung GUT (1,6)
Scheppach Bandschleifer und Tellerschleifer bts 800
Im Vergleich: Tellerschleifer
Vergleich.org

360°

LOGISTICAL DATA

Weight net / gross	16,85 / 18,25 kg
Packaging dimensions	560 x 315 x 335 mm
Article number	4903302901
Barcode	4014915082095
20 Container	560 pcs
40 Container	1120 pcs
40 HQ Container	1344 pcs

BELT AND DISC SANDER

- **370 W high-performance induction motor** for working quietly and with low vibration
- **Sanding belt can be adjusted for horizontal and vertical use**
- **Supporting table can be tilted**
- Solid **cast material construction** allows sufficiently high contact pressure for consistent, precise sanding results
- **Sanding disc with Velcro fastener** for easy replacement of sanding paper

Optional accessories can be found on pagee 85

BTS900

Scheppach bts900
Premium Class 1,4
Heimwerker Praxis 2/22
Value for money: Very good

Best Buy
Heimwerker Praxis 2/22

Supporting table can be tilted

Sanding disc with Velcro fastener

370 W motor

100 x 915 mm

Horizontal and vertical sanding belt

Sanding disc diameter 150 mm

INCLUDED

SPECIFICATIONS

Dimensions L x W x H	475 x 375 x 295 mm
Sanding belt length / width	915 / 100 mm
Sanding disc	150 mm
Table adjustment	0° – 45°
Belt speed	450 m/min
Sanding disc speed	2980 rpm
Suction connector diameter	63 mm
Motor	230 – 240 V~ / 50 Hz
Input	370 W

LOGISTICAL DATA

Weight net / gross	12 / 14 kg
Packaging dimensions	565 x 325 x 345 mm
Article number	5903306901
Barcode	4046664068396
20 Container	560 pcs
40 Container	1120 pcs
40 HQ Container	1344 pcs

BELT AND DISC SANDER

- **370 W high-performance induction motor** for working quietly and with low vibration
- **Sanding belt can be adjusted horizontally and vertically**
- Supporting table can be tilted
- Solid construction allows sufficiently high contact pressure for consistent, precise sanding results
- **Sanding disc with Velcro fastener** for easy replacement of sanding paper
- **Including transverse stop and 3 additional sanding belts and sanding discs respectively**

Optional accessories can be found on page 85

360°

selbst ist der Mann
Das Do-it-yourself-Magazin
SELBST AUSPROBIERT
RESULT: TTTTT
Rated as "VERY GOOD"
Edition 04/2013
www.selbst.de

INCLUDED

OSCILLATING SPINDLE GRINDING MACHINE

- **Compact and lightweight** for convenient transport
- High-performance **450 W motor** with sufficient power for all types of timber
- **Rotating and oscillating spindle** for smooth sanding surfaces and precise detailed work
- **Large, solid work table made of grey cast iron** for maximum precision and stability, even when processing large work pieces
- Integrated dust extraction nozzle connected to an extraction system ensures safe work
- **Includes 6 sanding sleeves with diameters of 15, 21, 28, 40, 53 and 77 mm, matching rubber rollers, table inserts and 4 spindle discs**
- Storage options on the side for accessories and mounting tools
- Easy-to-reach and dustproof on/off switch

SPECIFICATIONS

Dimensions L x W x H	400 x 365 x 440 mm
Table size	370 x 290 mm
Speed	2000 rpm
Oscillation stroke	16 mm
Spindle diameter	12.7 mm
Motor	220 – 240 V~ / 50 Hz
Input	450 W

LOGISTICAL DATA

Weight net / gross	12 / 14 kg
Packaging dimensions	460 x 410 x 530 mm
Article number	4903401901
Barcode	4014915082101
20 Container	280 pcs
40 Container	560 pcs
40 HQ Container	660 pcs

Optional accessories can be found on page 85

OSM600

360°

selbst ist der Mann
Das Do-it-yourself-Magazin
SELBST AUSPROBIERT
RESULT: TTTTT
Rated as "VERY GOOD"
Edition 04/2019
www.selbst.de

SPECIFICATIONS

Dimensions L x W x H	400 x 360 x 440 mm
Table size	410 x 425 mm
Grinding belt length / width	610 / 100 mm
Speed	2000 rpm
Oscillation stroke	16 mm
Spindle diameter	12.6 mm
Motor	220 – 240 V~ / 50 Hz
Input	450 W

LOGISTICAL DATA

Weight net / gross	12.9 / 14.9 kg
Packaging dimensions	460 x 410 x 530 mm
Article number	5903405901
Barcode	4046664069447
20 Container	264 pcs
40 Container	440 pcs
40 HQ Container	550 pcs

OSCILLATING EDGE-, BELT- AND SPINDLE SANDER

- **High-performance 450 W motor** with sufficient power for all types of timber
- **Rotating and oscillating spindle** for smooth sanding surfaces and precise detailed work
- **Large aluminium work table** for maximum precision and stability, even when processing large work pieces
- **Work table can be adjusted by 45° for precision work**
- **Includes 5 sanding sleeves** with diameters of 13, 19, 26, 38 and 51 mm, matching rubber rollers, table inserts and a sanding belt
- Practical storage options for accessories and mounting tools
- Integrated dust extraction nozzle connected to an extraction system ensures safe work
- Easy-to-reach and dustproof on/off switch

Optional accessories can be found on page 85

OSM100 / OSM600

	Description	Article number	Barcode	
Sanding sleeves	Grit 80 Ø 13 / 19 / 26 / 38 / 51 / 76 mm (3 pcs)	7903400701	4014915098164	
	Grit 120 Ø 13 / 19 / 26 / 38 / 51 / 76 mm (3 pcs)	7903400702	4014915098171	
	Grit 240 Ø 13 / 19 / 26 / 38 / 51 / 76 mm (3 pcs)	7903400703	4014915098188	
Sanding belt for OSM600	Grit 100 x 600 mm 80 / 100 / 120 mm (3 pcs)	7903400705	4046664071716	

BTS800 / BTS900

	Description	Article number	Barcode	
Sanding belt / disc set – 12 pcs	Sanding paper grit 80, 120 and 180 (3 pcs) Sanding belt grit 80, 120 and 180 (1 pcs)	7903302601	4014915086642	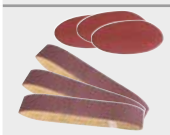
Sanding disc set	Ø 150 mm – grit 80 (10 pcs)	88000208	4014915032472	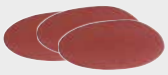
	Ø 150 mm – grit 120 (10 pcs)	88000209	4014915032489	
	Ø 150 mm – grit 180 (10 pcs)	88000220	4014915039976	
Sanding belt set	914 x 100 mm – grit 80 (3 pcs)	88000211	4014915032502	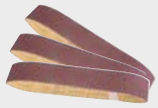
	914 x 100 mm – grit 120 (3 pcs)	88000212	4014915032519	
	914 x 100 mm – grit 180 (3 pcs)	88000221	4014915039983	
Sanding mesh diameter 150 mm	Grit 80 and 180 (5 pcs)	7903301706	4014915039983	

BTS700

	Description	Article number	Barcode	
Sanding belt / disc set – 12 pcs	Sanding paper grit 80, 120 and 180 (à 3 pcs) Sanding belt grit 60, 100 and 180 (à 1 pcs)	3903301707	4046664026600	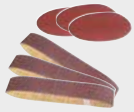
Sanding disc set (Velcro)	Ø 125 mm – grit 80 / grit 120 / grit 180 (3 pcs)	7903301701	4014915098195	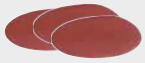
Sanding belt set	762 x 25 mm – grit 60 / grit 100 / grit 180 (3 pcs)	7903301702	4014915098201	
Sanding belt set	25 x 762 mm – grit 80	7903306603	4014915228066	
	25 x 762 mm – grit 120			

BGS700

	Description	Article number	Barcode	
Sanding belt set	686 x 50 mm – grit 60 (3 pcs)	7903303701	4014915098218	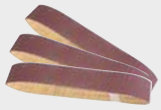
	686 x 50 mm – grit 120 (3 pcs)			
	686 x 50 mm – grit 180 (3 pcs)			

MRS1300

UNIVERSAL RENOVATION GRINDER

- **Suitable for different materials** such as timber, metal, stone, tiles, plastic and painted surfaces
- **Ideal for cleaning, degreasing, satin finishing, polishing, brightening, grinding and sanding**
- Grinding/sanding or brushing ensures thorough cleaning of different surfaces
- **Powerful 1300 W motor**
- Two handles for comfortable use and secure guidance
- **Brush width 100 mm, diameter 120 mm**
- Also suitable for working on small areas and narrow sections
- **Variable speed range 900 – 3,200 rpm**
- **Soft-start function to protect the motor**
- **Integrated connection for an extraction system**
- Additional brush attachments are available as accessories for different requirements
- Includes brass wire brush for various work on timber, metal and stone

Connection for dust extraction

Variable speed

SPECIFICATIONS

Dimensions L x W x H	460 x 205 x 140 mm
Grinding/sanding diameter	120 mm
Grinding/sanding width	100 mm
Motor speed	900 – 3200 rpm
Motor	220 – 240 V~ / 50/60 Hz
Input	1300 W

LOGISTICAL DATA

Weight net / gross	4.6 / 5.4 kg
Packaging dimensions	470 x 210 x 140 mm
Article number	5903819901
Barcode	4046664161950
20 Container	1656 pcs
40 Container	3580 pcs
40 HQ Container	4500 pcs

INCLUDES BRASS WIRE BRUSH

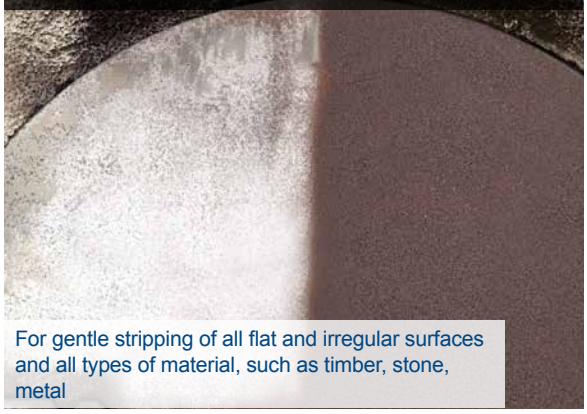

For gentle stripping of all flat and irregular surfaces and all types of material, such as timber, stone, metal

Ideal for gentle cleaning of stainless steel grates on barbecues, for example

For thorough cleaning of stone

POLISHING

SATIN FINISHING

CLEANING

GRINDING/SANDING

DE-RUSTING

BRIGHTENING

Optional accessories required

OPTIONAL ACCESSORIES

FELT ROLLER BRUSH

Article number: 7903800712
Barcode: 4014915231486

SYNTHETIC FIBER BRUSH

Article number: 7903800713
Barcode: 4014915231493

PLASTIC FIBER BRUSH

Article number: 7903800714
Barcode: 4014915231509

NYLON WIRE WHEEL

Article number: 7903800715
Barcode: 4014915231516

METAL WIRE BRUSH

Article number: 7903800719
Barcode: 4014915231554

BRASS WIRE BRUSH

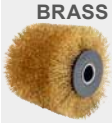

Article number: 7903800718
Barcode: 4014915231547

SILICON CARBIDE BRUSH

Article number: 7903800720
Barcode: 4014915231561

ABRASIVE STRAP BRUSH

Article number: 7903800716
Barcode: 4014915231523

SLAT BRUSH

Article number: 7903800717
Barcode: 4014915231530

TWISTED METAL WIRE BRUSH

Article number: 7903800721
Barcode: 4014915231578

Optional accessories can be found on page 88

MRS1300

	Description	Article number	Barcode
Felt roller brush	Suitable for polishing marble as well as painted and unpainted metals (diameter 125 mm, width 100 mm)	7903800712	4014915231486
Synthetic fiber brush	Suitable for cleaning flat and irregular timber, stone and metal areas as well as tiles and joints (diameter 125 mm, width 100 mm)	7903800713	4014915231493
Plastic fiber brush	Suitable for cleaning smooth and irregular timber, stone and metal areas as well as tiles and joints. Also suitable for brushing synthetic grass (diameter 125 mm, width 100 mm)	7903800714	4014915231509
Nylon wire wheel	Suitable for cleaning flat and irregular timber, stone and metal areas as well as for degreasing and scouring (diameter 125 mm, width 100 mm)	7903800715	4014915231516
Abrasive strap brush	Suitable for sanding timber, with an irregular surface, too (diameter 125 mm, width 100 mm)	7903800716	4014915231523

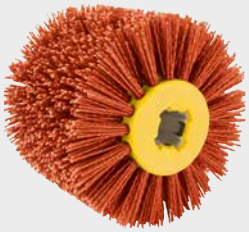

MRS1300

	Description	Article number	Barcode
Slat brush	Suitable for sanding flat timber surfaces (diameter 125 mm, width 100 mm)	7903800717	4014915231530
Brass wire brush	Suitable for sanding, brightening and stripping timber, stone, metal (diameter 125 mm, width 100 mm)	7903800718	4014915231547
Metal wire brush	Suitable for stripping and sanding different surfaces and materials such as timber, stone or metal (diameter 125 mm, width 100 mm)	7903800719	4014915231554
Silicon carbide brush	Suitable for sanding and stripping metal or preparing for welding (diameter 125 mm, width 100 mm)	7903800720	4014915231561
Twisted metal wire brush	Suitable for heavy-duty sanding or stripping flat stone and metal surfaces (diameter 125 mm, width 100 mm)	7903800721	4014915231578

DBS800

DRILL BIT SHARPENER

- **Makes dull drill bits like new, in just 3 easy steps**
- **Diamond sharpening wheel** provides hundreds of sharpenings
- Sharpens most popular metal drill bit types and sizes
- **80 Watt motor** gives ample power for all applications
- **Diamond grinding wheel** ensures a fine, razor sharp finish on a range of tools
- Extremely effective **on high-speed drill bits** (3 – 13 mm)

360°

SPECIFICATIONS

Dimensions L x W x H max.	220 x 180 x 160 mm
Drill Ø	3 – 13 mm
Grinding disc Ø	79 mm
Speed	4200 rpm
Motor	230 V~ / 50 Hz
Input	80 W

LOGISTICAL DATA

Weight net / gross	2.7 / 3.1 kg
Packaging dimensions	230 x 190 x 165 mm
Article number	5903404901
Barcode	4046664063957
20 Container	3072 pcs
40 Container	6140 pcs
40 HQ Container	7456 pcs

INCLUDED

Many different holding options

WALL AND CEILING SANDER

- **Variable speed control** for optimum sanding on various surfaces.
- **Large 215 mm sanding disc**
- The sanding discs are easily attached with the Velcro fastening system
- Powerful **1200 Watt motor**
- **Built-in dust collection bag**
- Ergonomic design with many different holding options for fatigue-proof working
- **Extensive accessories include: 1.5 m hose, 6 pcs sanding disc, connection adapter, dust catcher with shoulder strap and additional handle**

SPECIFICATIONS

Dimensions L x W x H	380 x 260 x 260 mm
Sanding disc diameter	215 mm
Sanding disc speed	1500 – 3200 rpm
Dust collection diameter inner / outer	28 mm / 31 mm
Motor	230 V~
Input	1200 W

LOGISTICAL DATA

Weight net / gross	3.4 / 4.3 kg
Packaging dimensions	355 x 285 x 280 mm
Article number	5903802901
Barcode	4046664031529
20 Container	912 pcs
40 Container	1916 pcs
40 HQ Container	1920 pcs

Optional accessories can be found on page 99

CGP1200

UNIVERSAL 3IN1 WALL, FLOOR AND CEILING PROCESSING SYSTEM

- Powerful **1050 W motor** with adjustable speed between 410-1900 rpm
- **Two attachments** (spindle locking) **can be changed easily**
- **Carbide cup wheel** to remove heavy-duty material
- **180 mm sanding plate** with quick-fit fastening system
- Integrated suction function with **25 L dust bag** and flexible **suction hose** (1 to 3.5 m)
- Connection for an external dust extractor including adapter
- Ergonomically shaped equipment and extensive handle adjustment
- **Large range of accessories: Set of six sandpapers, carbide cup wheel, dust bag with extraction hose, extraction adapter**

INCLUDED

OPTIONAL ACCESSORIES

SANDING DISC SET

Ø 180 mm

Article number: 7903800710
Barcode: 4014915230397

CARBIDE CUP WHEEL

Article number: 7903800711
Barcode: 4014915230403

SPECIFICATIONS

Dimensions L x W x H	370 x 210 x 170 mm
Sanding disc diameter	180 mm
Speed	410 – 1900 rpm
Sanding disc diameter	180 mm
Dust collection diameter	40 mm
Motor	230 V~ / 50 Hz
Input	1050 W

LOGISTICAL DATA

Weight net / gross	4 / 5 kg
Packaging dimensions	380 x 220 x 190 mm
Article number	5903818901
Barcode	4046664137870
20 Container	1640 pcs
40 Container	3400 pcs
40 HQ Container	3980 pcs

CGP1200

VARIABLE SPEED

3 IN 1

- ✓ Drywall sander
- ✓ Ceiling sander
- ✓ Floor sander

DS920x

WALL AND CEILING SANDER

- **Powerful 710 W motor**
- **Variable speed control** enables perfect results on different surfaces
- **Large areas can be covered** in one operation thanks to a **210 mm sanding plate**
- With **telescopic function** for optimized working on areas that are difficult to access
- Sanding disc can be quickly changed using the velcro fastener
- Its **light weight of 4.9 kg** and many grip options allow working that does not tire you out
- **Delivery contents: LED work lamp, 4 m extraction hose, 6 sanding discs, Suction adapter**

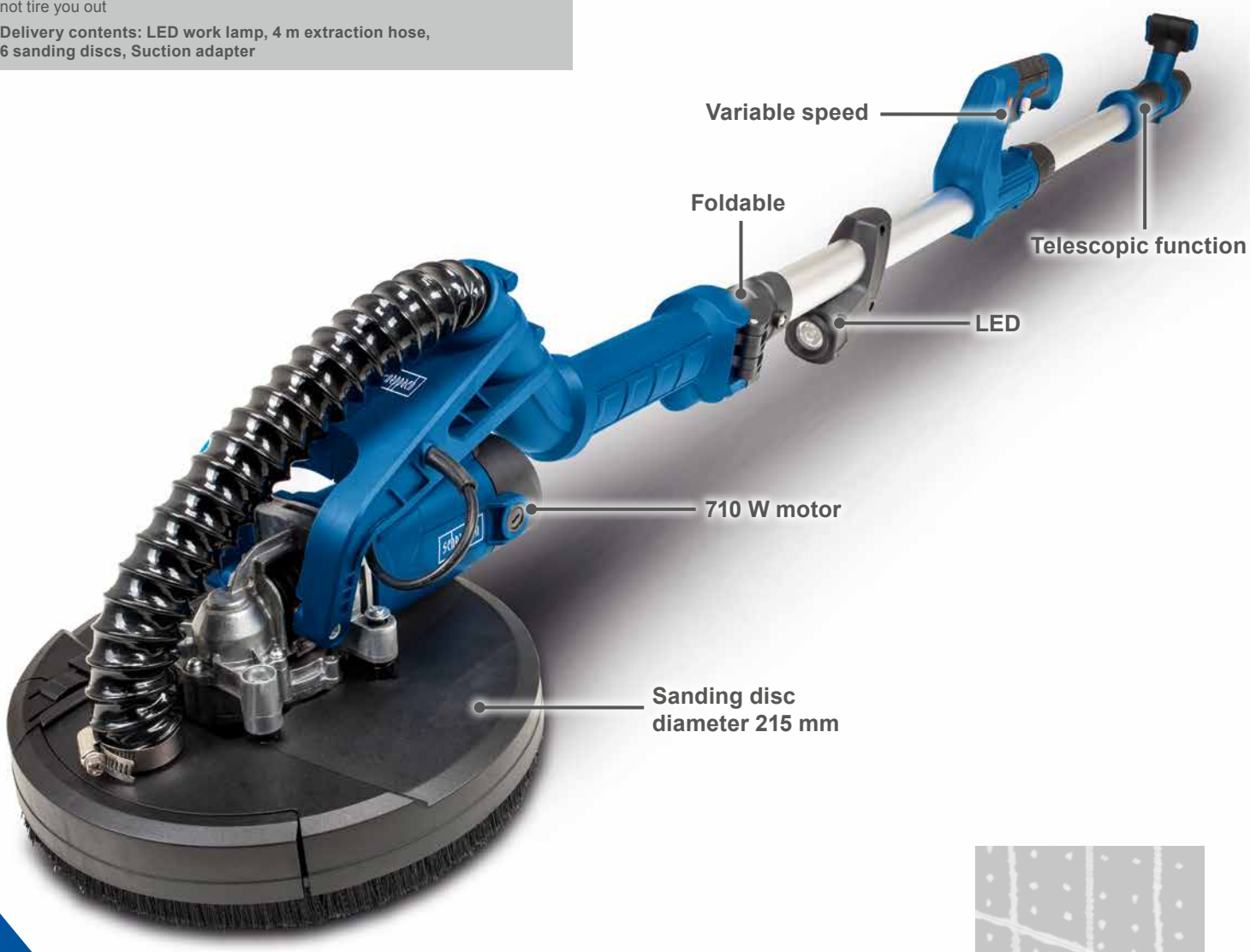

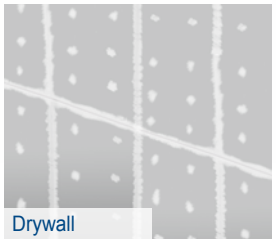
Drywall

Floor with glue

Wall surfacer

INCLUDED

DS920x

VARIABLE SPEED

Sanding disc can be quickly changed using the velcro fastener

Easy storage, foldable

Removable cover for easy sanding between wall and floor

LED

SPECIFICATIONS

Dimensions L x W x H	1450 – 1700 x 255 x 240 mm
Sanding disc diameter	215 mm
Speed	800 – 1800 rpm
Sanding plate diameter	210 mm
Dust collection diameter inner / outer	35 mm / 38.5 mm
Motor	220 – 240 V~ / 50 Hz
Input	710 W

LOGISTICAL DATA

Weight net / gross	4.9 / 6.2 kg
Packaging dimensions	710 x 280 x 240 mm
Article number	5903817901
Barcode	4046664127963
20 Container	567 pcs
40 Container	1206 pcs
40 HQ Container	1340 pcs

Optional accessories can be found on page 99

DS930

360°

Variable speed

710 W motor

Replaceable head system

Circular sanding disc diameter 215 mm

282 x 282 x 282 mm abrasive triangle dimensions

INCLUDED

12x

12x

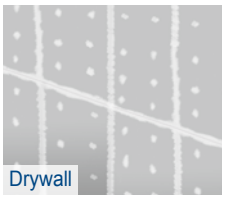
Drywall

Floor with glue

Wall surfacer

SPECIFICATIONS

Dimensions L x W x H L x B x H	1400 – 1650 x 250 x 240 mm
Circular sanding disc diameter	215 mm
Triangular sanding paper	282 x 282 x 282 mm
Circular disc speed	1200 – 2500 rpm
Triangular abrasive paper oscillations	3500 – 7500 rpm
Dust collection diameter inner / outer	45 mm / 50 mm
Motor	230 – 240 V~
Input	710 W

LOGISTICAL DATA

Weight net / gross	4.5 / 8.9 kg
Packaging dimensions	735 x 286 x 265 mm
Article number	5903805901
Barcode	4046664044550
20 Container	495 pcs
40 Container	1020 pcs
40 HQ Container	1279 pcs

2IN1

✓ Plasterboard
✓ Triangular sander

WALL AND CEILING SANDER

- Replaceable head system with a circular and a triangular sanding head
- **High-performance 710 W motor**
- **Adjustable speed control** for perfect results on different surfaces
- **Covers extensive areas** in one action, thanks to **large sanding discs (215 mm in diameter) and abrasive triangles (282 x 282 x 282 mm)**
- **Telescopic functio**n so hard-to-reach areas can be processed perfectly
- Quick replacement of sanding paper, thanks to Velcro fastener
- **Light weight of 4.5 kg** with many holding options for fatigue-free working
- **Comprehensive delivery contents: 4 m extraction hose with 2 extraction adapters and 12 each of circular and triangular sanding discs**

Large sanding base for economical sanding over large areas

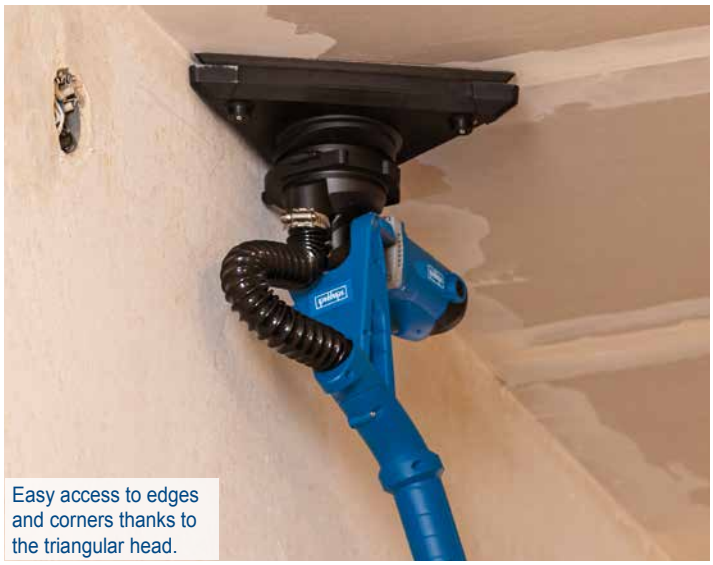

Easy access to edges and corners thanks to the triangular head.

Abrasive paper can be quickly changed using the velcro fastener

Easy storage, foldable

Optional accessories can be found on page 99

WALL AND CEILING SANDERS

DS930

	Description	Article number	Barcode
Circular abrasive paper Ø 215 mm	Grit 80 (10 pcs)	5903802701	4046664031574
	Grit 100 (10 pcs)	5903802702	4046664031581
	Grit 120 (10 pcs)	5903802703	4046664031598
	Grit 150 (10 pcs)	5903802704	4046664031635
	Grit 180 (10 pcs)	5903802705	4046664031611
	Grit 240 (10 pcs)	5903802706	4046664031628
Triangular abrasive paper 280 x 280 x 280 mm	Grit 80 (10 pcs)	7903800601	4046664035749
	Grit 100 (10 pcs)	7903800602	4046664035756
	Grit 120 (10 pcs)	7903800603	4046664035763
	Grit 150 (10 pcs)	7903800604	4046664035770
	Grit 180 (10 pcs)	7903800605	4046664035787
	Grit 240 (10 pcs)	7903800606	4046664035794

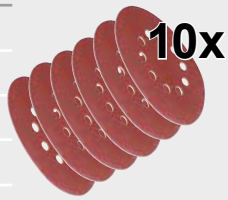

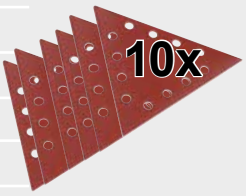

DS200

	Description	Article number	Barcode
Circular abrasive paper Ø 215 mm	Grit 80 (10 pcs)	5903802701	4046664031574
	Grit 100 (10 pcs)	5903802702	4046664031581
	Grit 120 (10 pcs)	5903802703	4046664031598
	Grit 150 (10 pcs)	5903802704	4046664031635
	Grit 180 (10 pcs)	5903802705	4046664031611
	Grit 240 (10 pcs)	5903802706	4046664031628

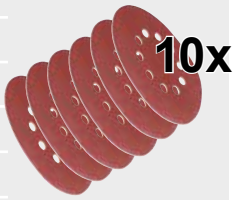

DS920x

	Description	Article number	Barcode
Circular abrasive paper Ø 225 mm	Grit 80, 100, 120, 150, 180 and 240 (à 1 pcs)	5903801701	4014915087120
Sanding mesh Ø 225 mm	Grit 80 and 180 (à 5 pcs)	7903800709	4014915230373

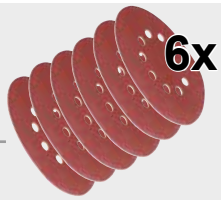

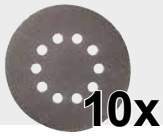

CGP1200

	Description	Article number	Barcode
Circular abrasive paper Ø 180 mm	Grit 40, 80, 120, 180 and 240 (à 2 pcs)	7903800710	4014915230397
Carbide cup wheel		7903800711	4014915230403

HL460

4 T LOG SPLITTER

- **Splitting up to 100 logs per hour**, its safe, silent operation will split **green wood logs or seasoned timbers effortlessly**
- **4 tons of hydraulic ram splitting power**
- **Log splitter capacity 370 mm x Ø 250 mm**
- Hydraulic cylinder with auto return
- Torsion-resistant, powder-coated steel structure
- **Sturdy splitting blade**
- Two handed operation keeps hands clear of action while operating
- Low maintenance, small footprint
- **Safety cover around the splitting zone**
- Storage table for split wood

OPTIONAL ACCESSORIES

HYDRAULIC OIL
1 litre

Article number: 16020280
Barcode: 44014915037583

HYDRAULIC OIL
5 litre

Article number: 16020281
Barcode: 4014915037590

Safety cage against splintering wood

SPECIFICATIONS

Splitting power max.	4 t
Wood Ø min – max.	50 – 250 mm
Wood length min – max.	130 – 370 mm
Hydraulic fluid capacity	2.4 L
Operating pressure	165 bar
Motor	230 V~ / 50 Hz
Input	1500 W

LOGISTICAL DATA

Weight net / gross	45 / 48.5 kg
Packaging dimensions	790 x 325 x 510 mm
Order number	5905209901
Article number	4046664071440
20 Container	196 pcs
40 Container	420 pcs
40 HQ Container	525 pcs

HL760L / HL760LS

7 T SPLITTER

- Splits stored and fresh wood effortlessly
- Splitting force: **7 tonnes**
- **Log splitter capacity maximum length 52 cm, up to 25 cm diameter**
- Hydraulic cylinder with automatic return
- Torsion-resistant, powder-coated steel structure
- Sturdy splitting blade
- Powerful **motor of 2200 W**
- Freely-adjustable splitting stroke
- **Optimised safety thanks to two-handed operation**
- **Low maintenance, small footprint**
- Safety cover around the splitting area
- Tray table for logs
- **Including machine stand (HL760LS)**

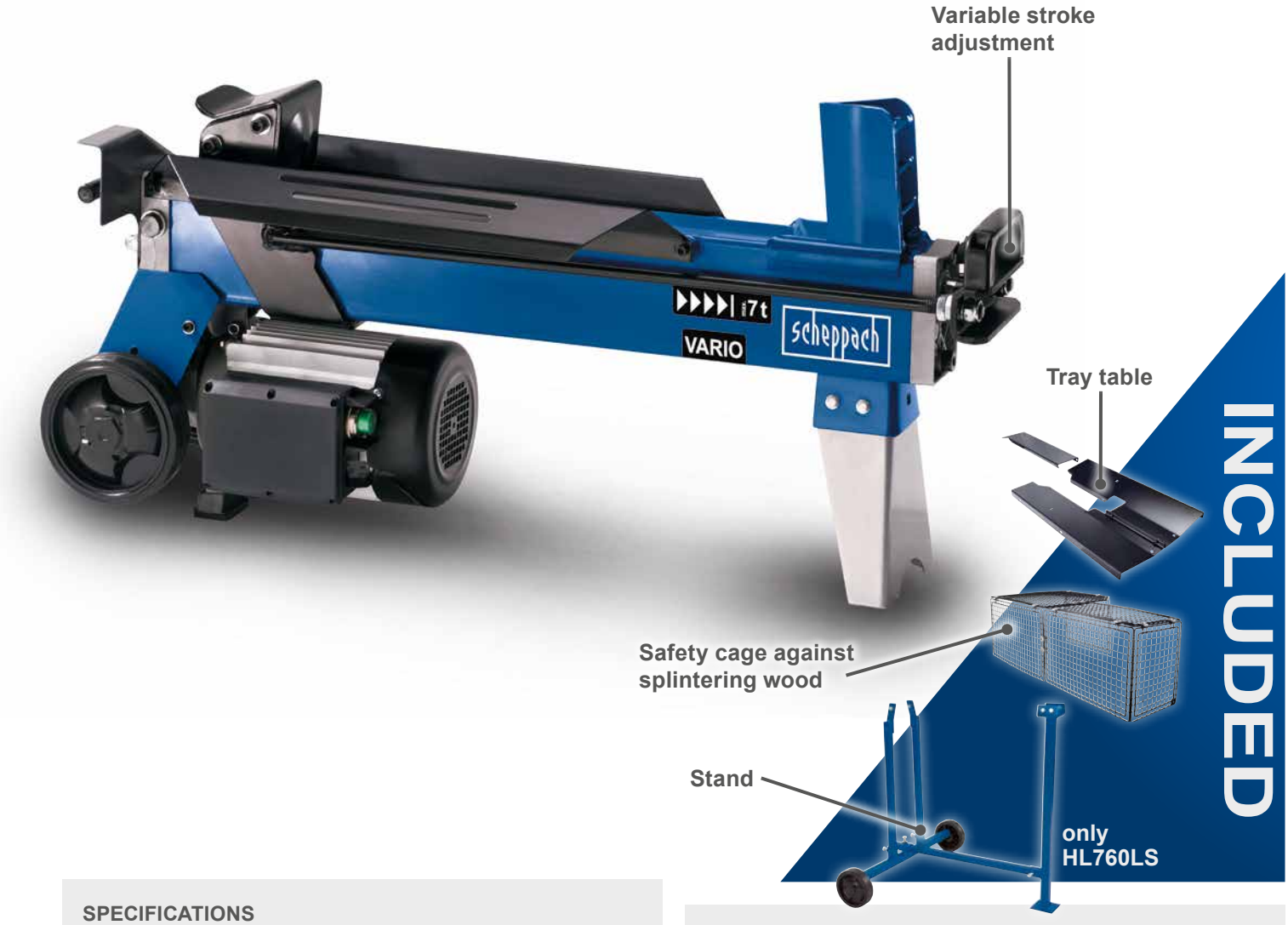

SPECIFICATIONS

Dimensions L x W x H	1160 x 425 x 610 mm (HL760L) 1160 x 725 x 1350 mm (HL760LS)
Splitting power max.	7 t
Wood Ø min. – max.	50 – 250 mm
Wood length min. – max.	200 – 520 mm
Speed forward	3,08 cm/s
Speed backward	5,29 cm/s
Motor	220 – 240 V~ / 50 Hz
Input	2200 W

LOGISTICAL DATA

	HL760LS	HL760L
Weight net / gross	59 / 64 kg	59 / 63 kg
Packaging dimensions	950 x 325 x 510 mm	
Article number	5905211934	5905211903
Barcode	4046664120698	4046664121787
20 Container	168 pcs	168 pcs
40 Container	344 pcs	344 pcs
40 HQ Container	430 pcs	430 pcs

HL730

7 T LOG SPLITTER

- Powerful **7 tons** splitting power
- Suitable for soft- and hardwood
- **Stroke 495 mm**
- **Wheels** for easy transportation
- Two handed operation for enhanced safety
- Torsion-resistant powder-coated steel construction
- **Split wood catcher on both sides**
- **Split wood tray on both sides**
- **Splitting height can be adjusted**

OPTIONAL ACCESSORIES

HYDRAULIC OIL
1 litre

Article number: 16020280
Barcode: 44014915037583

HYDRAULIC OIL
5 litre

Article number: 16020281
Barcode: 4014915037590

SPECIFICATIONS

	230 V~	400 V~
Splitting power max.	7 t	
Splitting length min. – max.	100 – 550 mm	
Wood Ø min. – max.	100 – 300 mm	
Stroke	495 mm	
Motor	230 V~ / 50 Hz	400 V~ / 50 Hz
Input	3000 W	2100 W

LOGISTICAL DATA

	230 V~	400 V~
Weight net / gross	98.2 / 103.5 kg	97.5 / 102.5 kg
Packaging dimensions	550 x 345 x 1035 mm 550 x 345 x 1150 mm (with palette)	
Article number	5905309901 (230 V~)	5905309902 (400 V)
Barcode	4046664071471	4046664071501
20 Container	124 pcs	
40 Container	252 pcs	
40 HQ Container	252 pcs	

8 T LOG SPLITTER

- **Generates up to 8 tons of splitting pressure**
- Splits all kinds of wood, hard or soft
- **Cylinder stroke 550 mm**
- **Large wheels** and a carriage device provides mobility
- **An exceptionally high safety standard by virtue of the two handed operating system**
- **Torsional stability – resistant steel construction**
- **Wood catcher on each side**
- **Splitting height can be adjusted**

OPTIONAL ACCESSORIES

HYDRAULIC OIL
1 litre

Article number: 16020280
Barcode: 44014915037583

HYDRAULIC OIL
5 litre

Article number: 16020281
Barcode: 4014915037590

Wood catcher and tray each side

SPECIFICATIONS

Dimensions L x W x H	845 x 935 x 1500 mm	
Splitting power max.	8 t	
Splitting length min. – max.	100 – 550 mm	
Wood Ø min. – max.	100 – 300 mm	
Stroke	550 mm	
Motor	230 V~ / 50 Hz	400 V / 50 Hz
Input	3000 W	3500 W

LOGISTICAL DATA

Weight net / gross	109.9 / 117 kg	108.8 / 115.9 kg
Packaging dimensions	560 x 400 x 1040 mm 560 x 400 x 1150 mm (with palette)	
Article number	5905310901	5905310902
Barcode	4046664071488	4046664071495
20 Container	112 pcs	
40 Container	224 pcs	
40 HQ Container	224 pcs	

COMPACT 8T

7.95 T METRE LOG SPLITTER

- Powerful **splitting force of 7.95 tonnes**
- **Patented splitting technique – the only log splitter in Europe under 8 tonnes that can split metre logs**
- **GS-certified**
- Powerful **motor of max. 3500 W (400 V~)**
- Its compact design makes it easy to store **Machine height of only 99 cm in retracted position**
- Drift-free and tilt safe construction
- **Tilting table**
- **Log catching bar on both sides**
- Splits hard or soft wood with a **length of up to 1070 mm** effortlessly and reliably
- **Max. log diameter: 350 mm**
- **Two large transport wheels**
- **Vario system for adjustable splitting stroke**

OPTIONAL ACCESSORIES

HYDRAULIC OIL
1 litre

Article number: 16020280
Barcode: 44014915037583

HYDRAULIC OIL
5 litre

Article number: 16020281
Barcode: 4014915037590

Safety clamps on both sides for logs

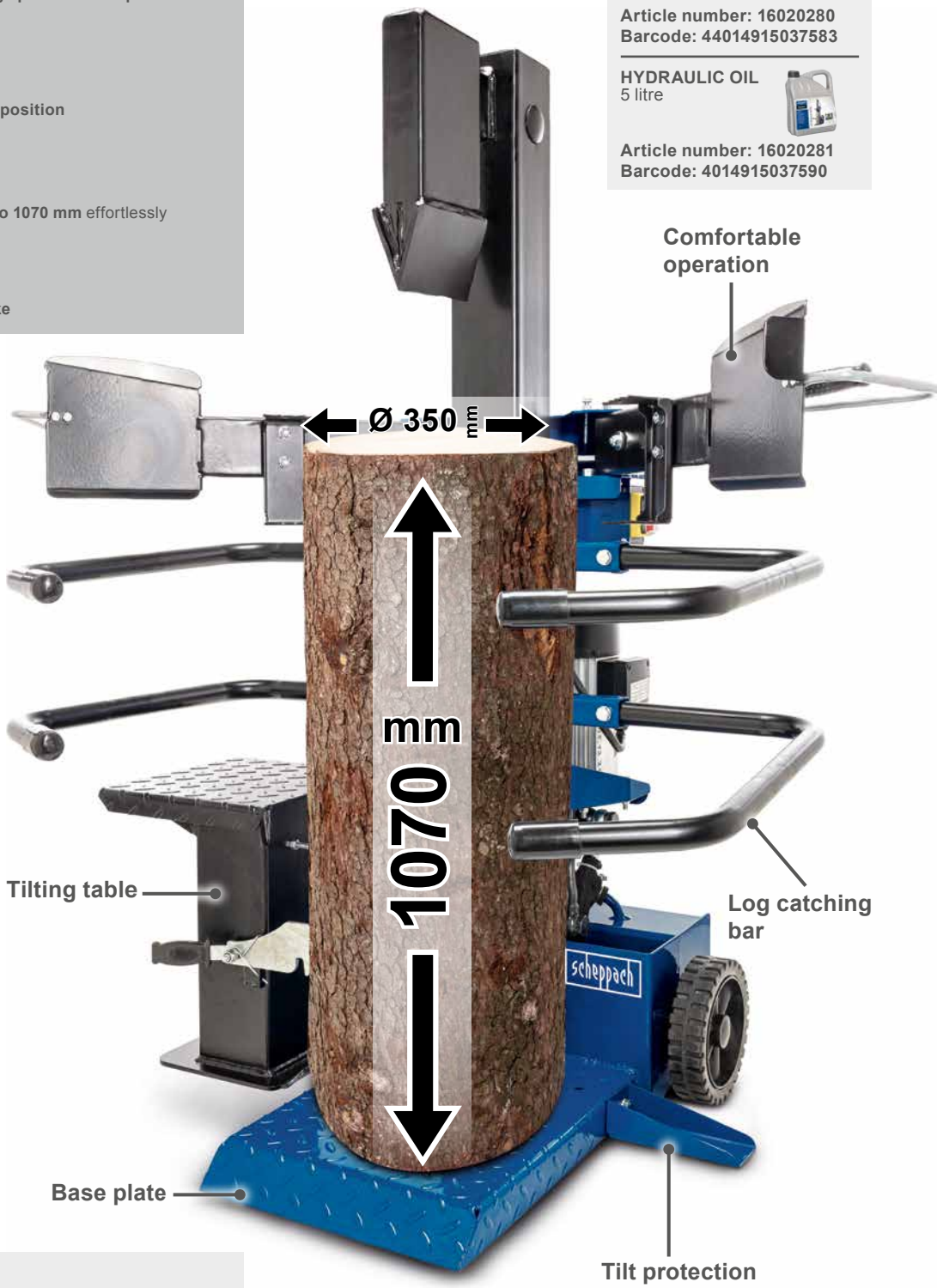

Europe's only ★ metre-long log splitter under 8 t

Worldwide patented splitting technique

SPECIFICATIONS

	230 V~	400 V~
Dimensions L x B x H	850 x 900 x 990/1465 mm	
Dimensions base plate	366 x 356 x 50 mm	
Splitting power max.	7.95 t	
Splitting length min. – max.	680 – 1070 mm	
Wood diameter min. – max.	80 – 350 mm	
Splitting speed max. feed	3.2 cm/s	5.5 cm/s
Splitting speed max. return	16 cm/s	17 cm/s
Working pressure	210 bar	
Cylinder stroke	485 mm	
Oil capacity	4.8 L	
Motor	230 V~ / 50 Hz	400 V~ / 50 Hz
Input	3150 W	3500 W

LOGISTICAL DATA

	230 V~	400 V~
Weight net / gross	125 kg / 135.5 kg	126 kg / 137.5 kg
Article number	5905419901	5905419902
Barcode	4046664128526	4046664123293
20 container	78 pcs	
40 container	168 pcs	
40 HQ container	162 pcs	

PRODUCT DETAILS

Log diameter

max 350 mm

Log size

max 1070 mm

Adjustable splitting system

stufenlos

Tested safety

Powerful splitting

7,95 t

Compact design

990 mm

Patented splitting technique

Unique in its class

Europe's only metre-long log splitter under 8 t

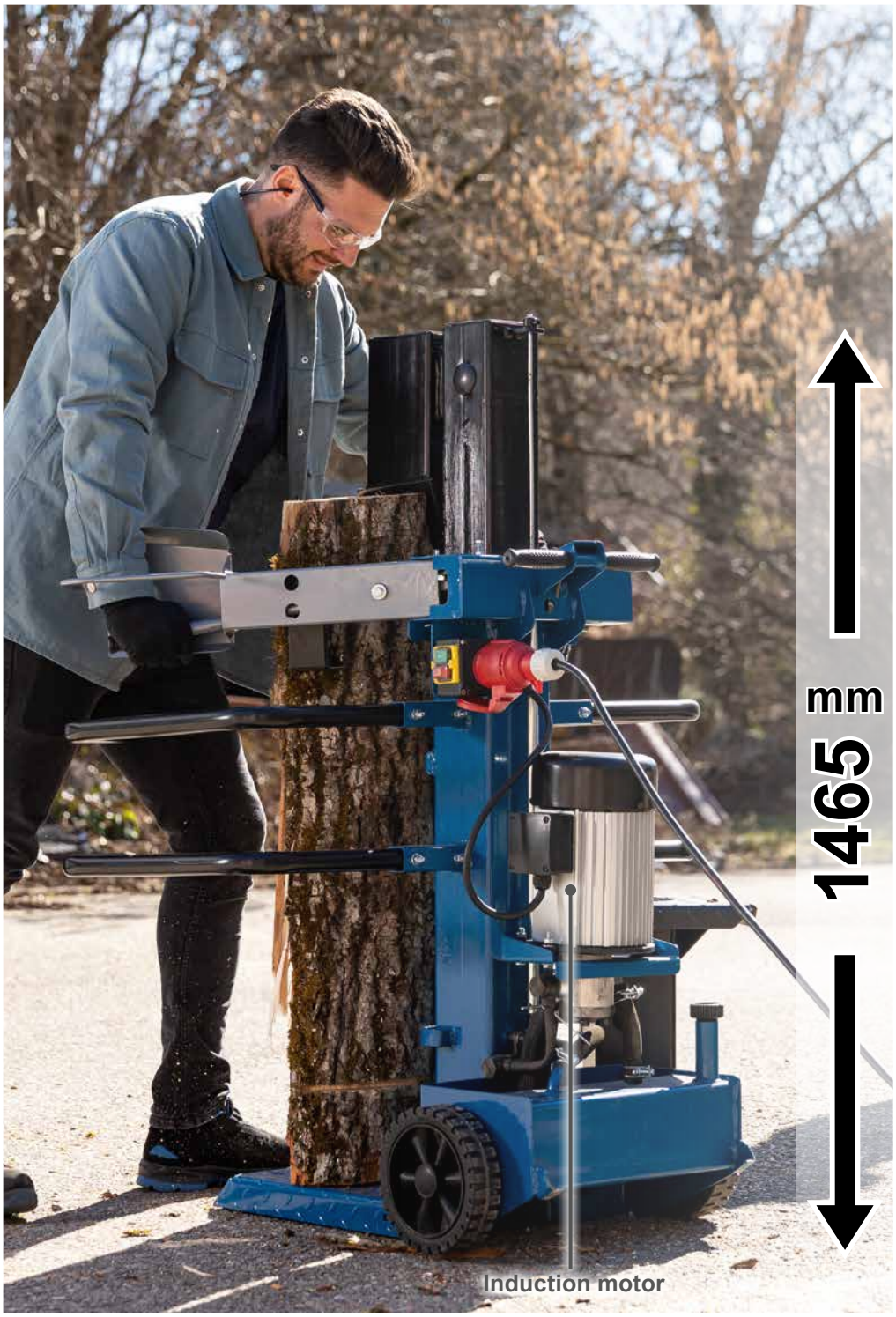

Height of only 990 mm in storage position

Wide range of uses because work table can be swivelled

2 power settings

230 V~ / 50 Hz	400 V~ / 50 Hz
3150 W	3500 W

BG-PRÜFZERT GS geprüfte Sicherheit

COMPACT 10T

Worldwide patented **splitting technique**

10 T METRE LOG SPLITTER

- **Powerful splitting force of 10 tonnes**
- **Patented splitting technique**
- Thanks to the tilting table, you can work particularly quickly
- **GS-certified**
- **Powerful motor of max. 3500 W**
- Its compact design makes it easy to store
  Machine height of only 102 cm in retracted position
- **Drift-free and tilt safe construction**
- **Log lifter and log catching bar included**
- Splits hard or soft wood with a length of up to 1070 mm effortlessly and reliably
- **Max. log diameter: 380 mm**
- **Two transport wheels**
- **Vario system for adjustable splitting stroke**

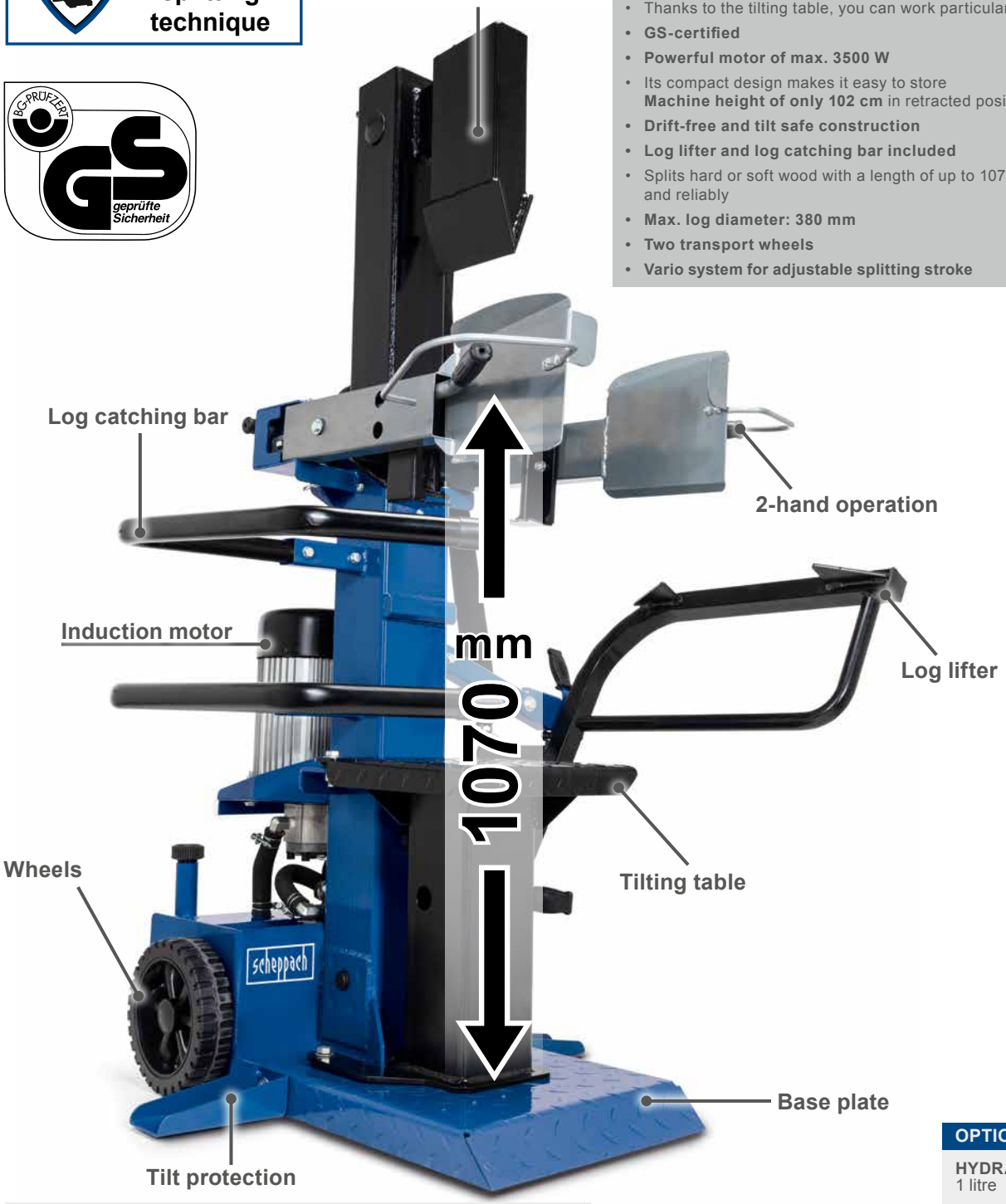

SPECIFICATIONS

	230 V~	400 V~
Dimensions L x B x H	830 x 930 x 1020 / 1500 mm	
Dimensions base plate	321 x 353 x 70 mm	
Splitting power max.	10 T	
Splitting length min. – max.	750 – 1070 mm	
Wood diameter min. – max.	80 – 380 mm	
Splitting speed max. feed	3 cm/s	5.5 cm/s
Splitting speed max. return	14 cm/s	15.4 cm/s
Working pressure	256 bar	
Cylinder stroke	485 mm	
Oil capacity	4.8 L	
Motor	230 V~ / 50 Hz	400 V~
Input	3150 W	3500 W

OPTIONAL ACCESSORIES

HYDRAULIC OIL
1 litre

Article number: 16020280
Barcode: 44014915037583

HYDRAULIC OIL
5 litre

Article number: 16020281
Barcode: 4014915037590

LOGISTICAL DATA

	230 V~	400 V~
Article number	5905423901	5905423902
Barcode	4046664157717	4046664147015
40 HQ Container	162 pcs	162 pcs

PRODUCT DETAILS

Log diameter

max. 380 mm

Log size

max. 1070 mm

Powerful splitting

10 T

Compact design

1020 mm

Adjustable splitting system

stufenlos

Transportable

Tested safety

Patented splitting technique

Sturdy construction

Effortless work thanks to log lifter

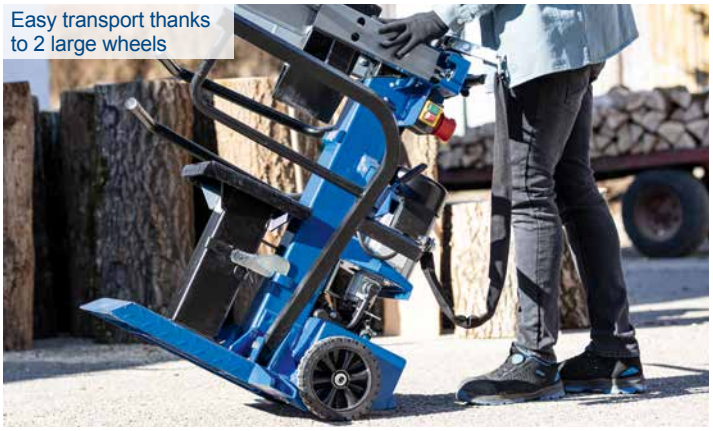
Easy transport thanks to 2 large wheels

Working at different heights possible because table can be swivelled

2 power settings

230 V~ / 50 Hz	400 V~ / 50 Hz
3150 W	3500 W

COMPACT 12T / COMPACT 15T

12 T / 15 T METRE LOG SPLITTER

- Powerful splitting force of **12 tonnes (15 t)**
- **Patented splitting technique**
- Thanks to the **tilting table, you can work particularly quickly and**
- **GS-certified**
- Powerful motor **of max. 3500W**
- Its compact design makes it easy to store
  Machine height of only 108 cm in retracted position
- Drift-free and tilt safe construction
- **Trunk lifter and log catching bar included**
- Splits hard or soft wood with a **length** of up to **1070 mm** effortlessly and reliably
- **Max. log diameter: 450 mm**
- **Three large transport wheels**
- **Vario system for adjustable splitting stroke**

Worldwide patented **splitting technique**

OPTIONAL ACCESSORIES

HYDRAULIC OIL
1 litre

Order No: 16020280
Barcode: 44014915037583

HYDRAULIC OIL
5 litre

Order No: 16020281
Barcode: 4014915037590

Thanks to the compact design, the unit is both space-saving and easy to transport

SPECIFICATIONS

	12 T	15 T
Dimensions L x W x H	1160 x 960 x 1080 / 1630 mm	
Dimensions base plate	321 x 353 x 70 mm	
Splitting power max.	12 T	15 T
Splitting length min. – max.	750 – 1070 mm	
Wood diameter min. – max.	120 – 450 mm	
Splitting speed max. feed	3,8 cm/s	
Splitting speed max. return	12,8 cm/s	
Working pressure	240 bar	267 bar
Cylinder stroke	550 mm	
Oil capacity	7 L	
Motor	400 V~ / 50 Hz	
Input	3500 W	

LOGISTICAL DATA

	12 T	15 T
Poids net/brut	184,5 / 196,8 kg	185,5 / 197,8 kg
Référence	5905421902	5905422902
Gencod	4046664123316	4046664123323
40 HQ Container	129 pcs	129 pcs

PRODUCT DETAILS

Log diameter

max 450 mm

Log size

max 1070 mm

Adjustable splitting system

stufenlos

Tested safety

Powerful splitting

12 t (15 t)

Power output

3500 W

Compact design

1080 mm

Patented splitting technique

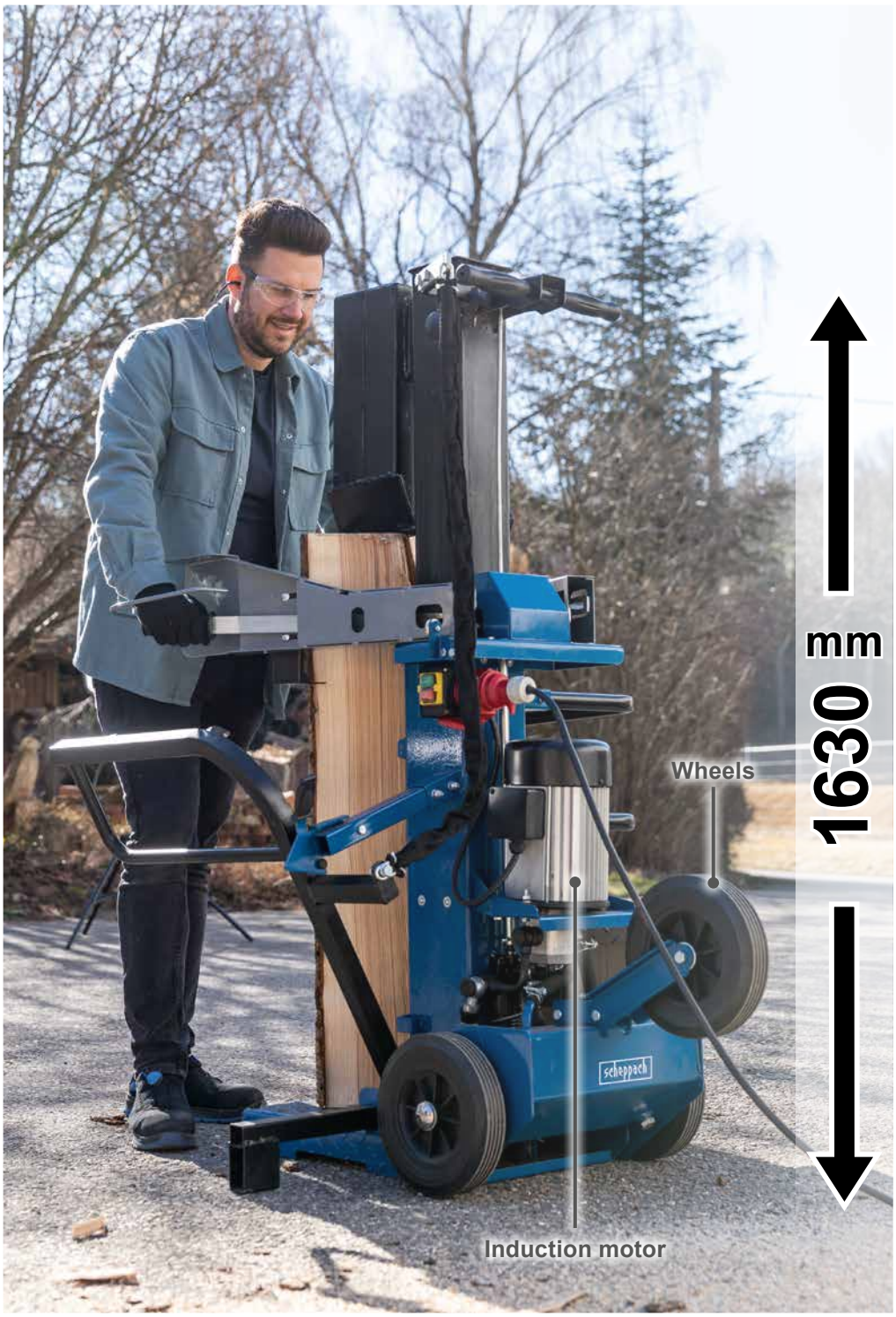

Wide range of uses because work table can be swivelled

Effortless work thanks to log lifter

Tilt protection for perfect support

HL2550GM

25 T METRE LOG SPLITTER

- **Splitting force: 25 tonnes**
- Splits hardwood or softwood with a length of **up to 1100 mm** effortlessly and reliably
- The low floor plate makes it easier to collect the logs
- **Adjustable splitting stroke**
- Large wheels and three-point attachment for mobile use
- The lowerable cylinder saves space when transporting and storing the splitter
- Optimised safety thanks to two-handed operation
- **Torsion-resistant, powder-coated steel structure**
- **Log catching bar**
- **Log fixing device**
- **Includes log lifter**

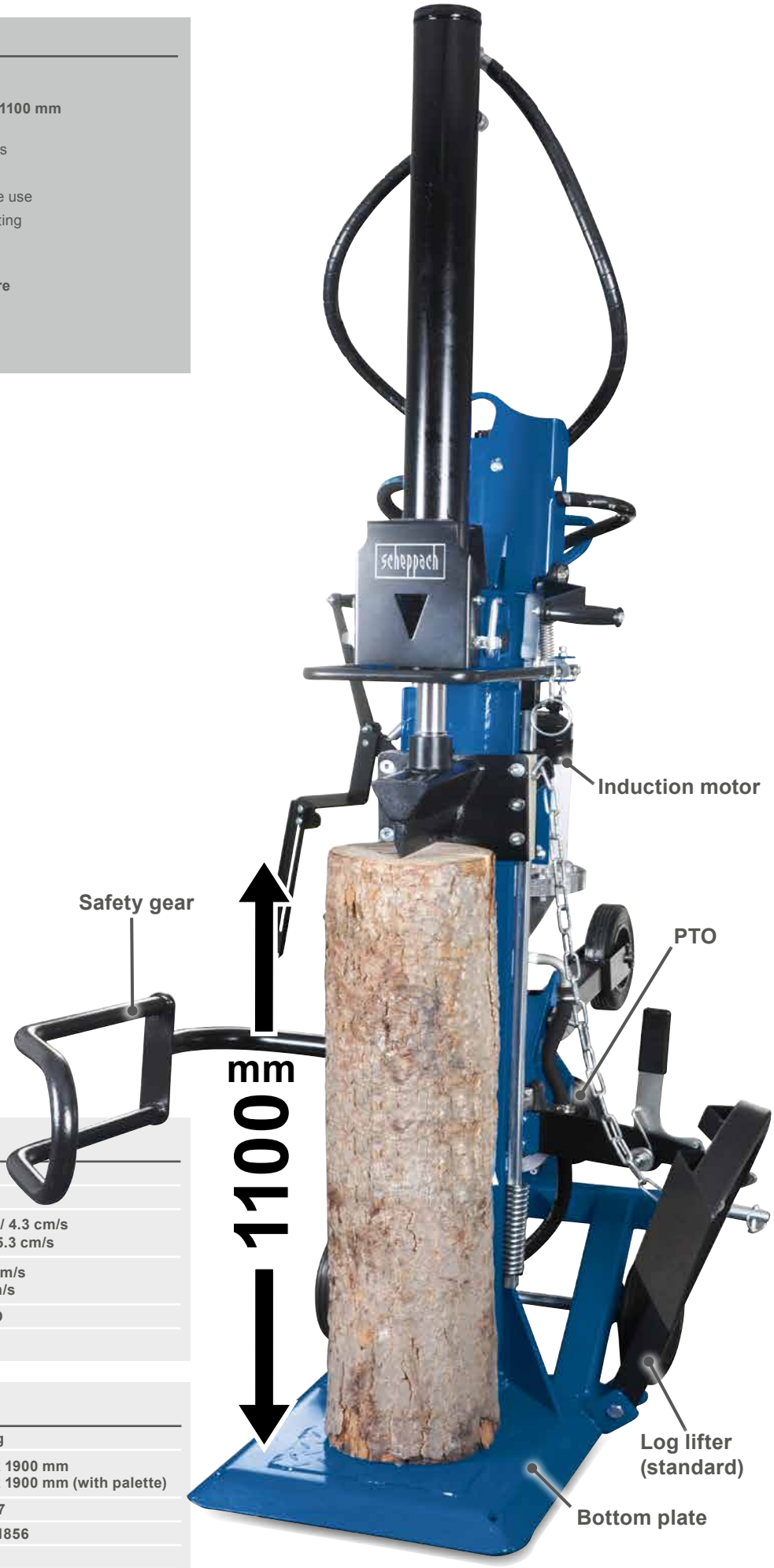

SPECIFICATIONS

Hydraulic pressure max.	22.7 MPa
Cylinder rise	948 mm
Forward speed 1 / 2	Motor: 10.5 / 4.3 cm/s PTO: 13.1 / 5.3 cm/s
Return speed	Motor: 7.5 cm/s PTO: 9.3 cm/s
Motor	400 V + PTO
Input	5100 W

LOGISTICAL DATA

Weight net / gross	319 / 320 kg
Packaging dimensions	940 x 680 x 1900 mm 940 x 680 x 1900 mm (with palette)
Article number	5905509917
Barcode	4046664111856
20 Container	20 pcs
40 Container	42 pcs
40 HQ Container	42 pcs

HL3000GM

30 T METRE LOG SPLITTER

- Available as a combination of shaft-driven and electric motor splitter or as a shaft-driven splitter only
- **30 ton splitting power**
- Splitting length **up to 1100 mm**
- **Lower ground plate for simple log loading**
- **Adjustable splitting stroke**
- Large wheels, lowered cylinder and foldable supporting arms for easy transportation
- Adjustable splitting length
- Two-handed operating system for enhanced safety
- **Three-point linkage for transportation by tractor**
- **Torsion-resistant, power-coated steel construction**
- **Safety gear and log lifter included**

SPECIFICATIONS

Splitting power max.	30 t
Wood length max.	1100 mm
Cylinder rise	948 mm
Forward speed 1 / 2	Motor: 12.5 / 3.,7 cm/s PTO: 21.5 / 5.7 cm/s
Return speed	Motor: 6.7 cm/s PTO: 10.4 cm/s
Motor	400 V + PTO
Input	5500 W

LOGISTICAL DATA

Weight net / gross	373.1 / 386.1 kg
Packaging dimensions	970 x 680 x 2000 mm
Article number	5905510902
Barcode	4046664072058
20 Container	20 pcs
40 Container	41 pcs
40 HQ Container	41 pcs

HS410

405 MM ROCKING LOG SAW

- **Robust steel construction**
- **High cutting performance**
- Includes stop to specify cutting length
- Quick and ergonomic handling with patented protection cover
- Enclosed and safe sawing area
- **Carbide toothed saw blade, diameter 405 mm**

With patented protective cover according to latest regulations

SPECIFICATIONS

Dimensions L x W x H	1002 x 737 x 1046 mm
Saw blade diameter	405 mm
Cutting diameter max.	140 mm
Cutting length min. / max.	300 – 1000 mm
Cutting speed	2800 rpm
Motor	230 V~
Input	2200 W

LOGISTICAL DATA

Weight net / gross	39 / 43 kg
Packaging dimensions	1075 x 776 x 247 mm
Article number	5905114901
Barcode	4046664071662
20 Container	150 pcs
40 Container	320 pcs
40 HQ Container	363 pcs

Optional accessories can be found on page 117

505 MM ROCKING LOG SAW

- **Robust, welded steel construction**
- High cutting performance
- Includes extendable rocker extension
- **Quick and ergonomic handling with patented protection cover**
- Enclosed and safe sawing area
- **Carbide toothed saw blade, diameter 505 mm**

With patented protective cover according to latest regulations

SPECIFICATIONS

Dimensions L x W x H	1015 x 809 x 994 mm
Saw blade diameter	505 mm
Cutting diameter min. – max.	30 – 170 mm
Cutting length min. – max.	250 – 1000 mm
Cutting speed	2800 rpm
Motor	230 V~
Input	3000 W

LOGISTICAL DATA

Weight net / gross	65 / 83 kg
Packaging dimensions	790 x 780 x 1135 mm
Article number	5905113901
Barcode	4046664071655
20 Container	42 pcs
40 Container	90 pcs
40 HQ Container	90 pcs

Optional accessories can be found on page 117

HS730

700 MM ROCKING LOG SAW

- High performance **700 mm HW sawblade**
- **Rugged welded steel construction for long service life**
- Extremely sturdy, powerful and comfortable
- Huge cutting capacity
- Fast and ergonomic handling with the protective cover
- Enclosed and safe sawing area

With patented protective cover according to latest regulations

SPECIFICATIONS

Dimensions L x W x H	1260 x 700 x 1220 mm
Saw blade diameter	700 mm
Cutting diameter min. – max.	30 – 240 mm
Cutting length min. – max.	250 – 1000 mm
Cutting speed	1400 rpm
Motor	400 V
Input	4500 W

LOGISTICAL DATA

Weight net/gross	89 / 149 kg
Packaging dimensions	1115 x 745 x 1100 mm
Article number	5905112902
Barcode	4046664069492
40 HQ Container	60 pcs

Optional accessories can be found on page 117

505 MM ROCKING LOG SAW

- Powerful **2600 W (230 V~) or 3000 W (400 V) motor**
- High performance **505 mm HW sawblade** for fast and efficient cutting of all types of wood
- **Rugged welded steel construction** for long service life
- **Huge cutting capacity**
- Fast and **ergonomic handling with the patented protective cover**
- Enclosed and safe sawing area
- **Extremely sturdy, powerful and comfortable**
- Cuts multiple logs at one stroke
- **Pre-assembled**

MADE IN GERMANY

PZ.LSV GS geprüfte Sicherheit

SPECIFICATIONS

Dimensions L x W x H	860 x 775 x 990 mm	
Saw blade diameter	505 mm	
Cutting diameter max.	170 mm	
Cutting length min. / max.	200 – 1200 mm	
Cutting speed	2800 rpm	
Motor	230 V~	400 V
Input	2600 W	3000 W

LOGISTICAL DATA

Weight net / gross	75 / 80.5 kg	
Packaging dimensions	940 x 765 x 620 mm	
Article number	5905108901 (230 V~)	5905108902 (400 V~)
Barcode	4014915194057	4014915194088
1 Truck	99 pcs	

Optional accessories can be found on page 117

HS720

700 MM ROCKING LOG SAW

- Powerful **3000 W (230 V~) or 4500 W (400 V) motor**
- High performance **700 mm HW sawblade** for fast and efficient cutting of all types of wood
- **Rugged welded steel construction for long service life**
- **Huge cutting capacity**
- Fast and **ergonomic handling with patented protective cover**
- **Enclosed and safe sawing area**
- **Effortless work because of the ideal rocker pivot point**
- **Fully assembled**
- Cuts multiple logs at one stroke

MADE IN GERMANY

PZ.LSV GS geprüfte Sicherheit

SPECIFICATIONS

Dimensions L x W x H	1270 x 730 x 1130 mm	
Saw blade diameter	700 mm	
Cutting diameter max.	240 mm	
Cutting length min. – max.	250 – 1500 mm	
Cutting speed	1400 rpm	
Motor	230 V~ / 50 Hz	380 – 420 V / 50 Hz
Input	3000 W	4500 W

LOGISTICAL DATA

Weight net / gross	95,5 / 117 kg	89.5 / 111 kg
Packaging dimensions	1200 x 800 x 1274 mm	
Article number	5905109901 (230 V~)	5905109902 (380 – 420 V)
Barcode	4014915194163	4014915194064
1 Truck	34 pcs	

Optional accessories can be found on page 117

HS510 / HS520

	Description	Article number	Barcode
1 TCT sawblade	Ø 505 x 30 mm / 40 T	7905100602	4046664029601
2 Circular sawblade CV	Ø 500 x 30 mm, AT* / 56 T	10023205	4014915010234
3 Circular sawblade TCT	Ø 500 x 30 mm, AT* / 44 T	15270704	4014915038696
4 Circular sawblade TCT	Ø 500 x 30 mm, AT* / 36 T	56000702	4014915038771

HS720

	Description	Article number	Barcode
1 TCT sawblade	Ø 700 x 30 mm / 56 T	10023207	4014915020981
2 Circular sawblade TCT	Ø 700 x 30 mm, AT* / 42 T	13108001	4014915031963
3 Circular sawblade TCT	Ø 700 x 30 mm, AT* / 84 T	13110701	4014915036838
4 Dust extractor unit	Connection Ø 100 mm	1905109700	4014915201847
5 Dust extractor unit for kwz 7.0, kw-ze 7.0 und wox d700sl	Connection Ø 100 mm	15300707	4014915071815
6 Rocker extension	With cutting length indicator up to 330 mm	15300706	4014915070146

5

6

HS730

	Description	Article number	Barcode
1 TCT sawblade	Ø 700 x 30 mm / 56 T	10023207	4014915020981
2 Circular sawblade TCT	Ø 700 x 30 mm, AT* / 42 T	13108001	4014915031963
3 Circular sawblade TCT	Ø 700 x 30 mm, AT* / 84 T	13110701	4014915036838

	Description	Article number	Barcode
1 Protective cover for HS520, HS720, HS720B, wox d700, wox d700sl, kw 7.0, kwz 7.0, kw-ze 7.0	1500 x 1000 x 1300 mm	7905301702	4014915087984

1

*AT = alternating teeth | LF = long cut - flat teeth

DP55

BENCH DRILL

- **Precise setting of the speed of 500 – 2600 rpm via digital display**
- Quick clamping of the drill into the precision drill chuck
- **Integrated laser** for precise drilling
- **Quick-release clamp** for fixing the workpieces
- Powerful **710 W motor**
- **280 mm distance between clamping chuck and table**
- **Chuck clamping range of 1.5 to 13 mm** for maximum drill holes of **13 mm in steel and of 40 mm in wood**
- Stable 320 x 305 mm mounting plate

360°

SPECIFICATIONS

Dimensions L x W x H	380 x 250 x 675 mm
Base L x B x H	320 x 305 x 30 mm
Speed range	500 – 2600 rpm
Chuck capacity	1.5 – 13 mm
Drill stroke	70 mm
Drill-Ø in wood	40 mm
Drill-Ø in steel	13 mm
Drive	electronically controlled
Chuck to base max.	280 mm
Motor	220 – 240 V~
Input	710 W

LOGISTICAL DATA

Weight net / gross	8.3 / 9.9 kg
Packaging dimensions	690 x 340 x 220 mm
Article number	5906822901
Barcode	4046664094913
20 Container	558 pcs
40 Container	1218 pcs
40 HQ Container	1458 pcs

BENCH DRILL

- **Absolutely precise setting of speed using digital display**
- **Easy to read drilling depth; stitch drilling also possible without problems**
- Powerful **2-gear drive** for the correct setting
- **Tool-free mounting** of the drill in the quick-release drill chuck
- **Integrated laser** for easy and precise drilling
- **Integrated LED** for perfect illumination of the work area
- The **quick clamp** also fixes round workpieces

360°

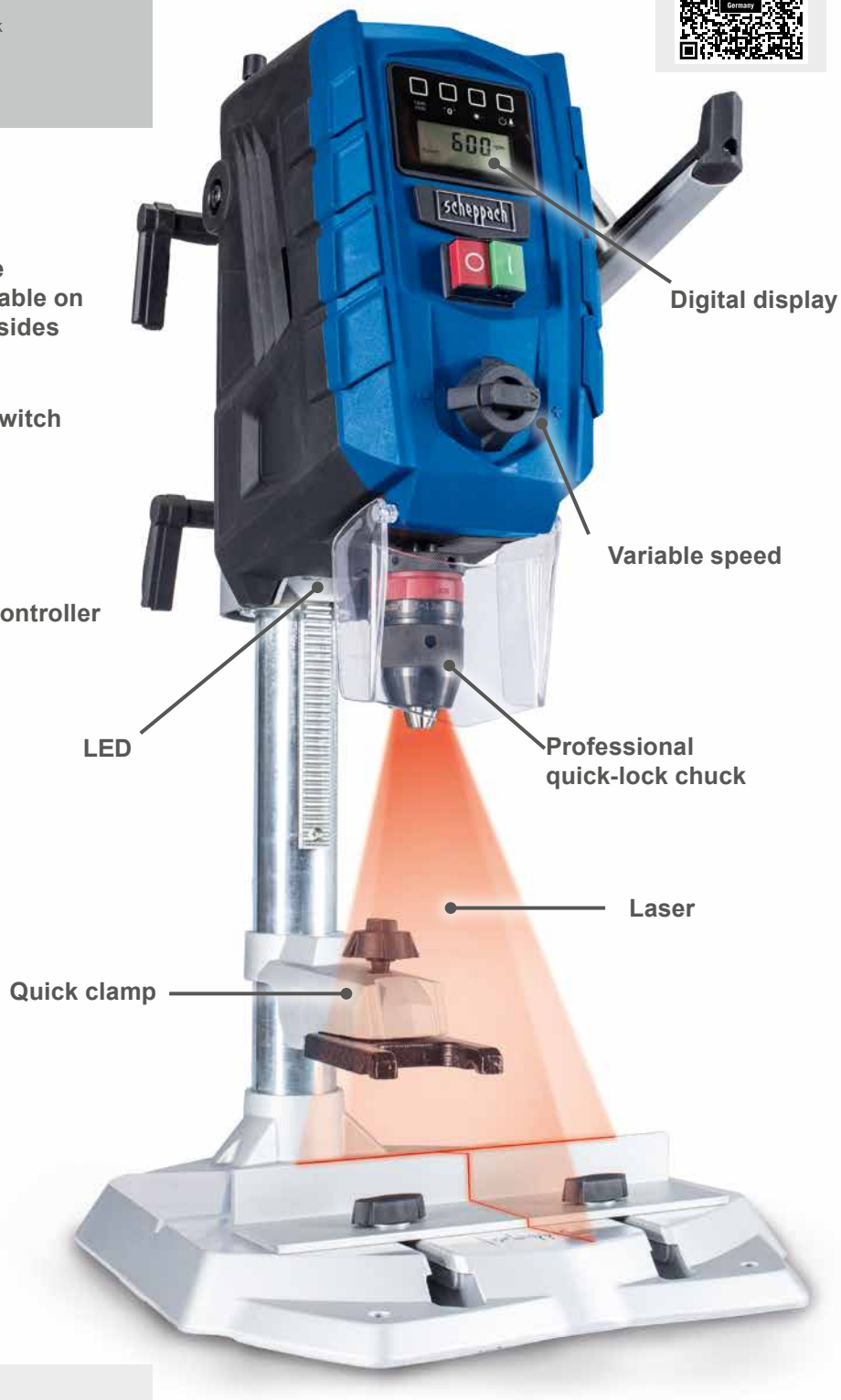

Scheppach DP60
Oberklasse
Heimwerker Praxis 6/2020
1,6
Preis/Leistung: gut – sehr gut

SPECIFICATIONS

Dimensions L x W x H	350 x 300 x 750 mm
Base L x B x H	350 x 300 x 30 mm
Speed range	170 – 880 / 490 – 2600 rpm
Chuck capacity	1.5 – 13 mm
Drill stroke	100 mm
Drill-Ø in wood	40 mm
Drill-Ø in steel	13 mm
Drive	2 gears
Chuck to base max.	280 mm
Motor	220 – 240 V~ / 50 Hz
Input	710 W

LOGISTICAL DATA

Weight net / gross	9.4 / 11.5 kg
Packaging dimensions	690 x 340 x 200 mm
Article number	5906821901
Barcode	4046664092209
20 Container	576 pcs
40 Container	1224 pcs
40 HQ Container	1445 pcs

DP16VLS

BENCH DRILL

- **5 speeds** for timber, metal and all conventional plastics
- Drill chuck capacity from **1.5 to 13 mm**
- Robust steel construction
- High-performance **500 W motor**
- **Integrated laser** for precise drilling results
- **250 mm max.** distance between chuck and frame foot
- **170 mm max**. distance between chuck and table
- Stable 190 x 290 mm base plate

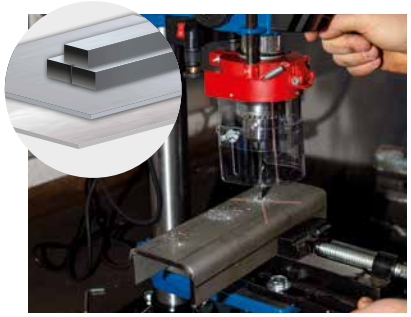

360°

SPECIFICATIONS

Dimensions L x W x H	435 x 220 x 600 mm
Table size	160 x 160 mm
Table tilt	45° – 0 – 45°
Speed range	600 – 2650 rpm
Chuck capacity	1.5 – 13 mm
Max. chuck to table	170 mm
Max. chuck to base	250 mm
Motor	230 – 240 V~
Input	500 W

LOGISTICAL DATA

Weight net / gross	13.5 / 15 kg
Packaging dimensions	460 x 380 x 250 mm
Article number	5906810901
Barcode	4046664068808
20 Container	640 pcs
40 Container	1380 pcs
40 HQ Container	1500 pcs

BENCH DRILL

- **5 speeds** for timber, metal and all conventional plastics
- Drill chuck capacity from **1.5 to 13 mm**
- Robust cast iron construction
- High-performance **550 W motor**
- Integrated laser for precise drilling results
- **405 mm max.** distance between chuck and frame foot
- **305 mm max.** distance between chuck and table
- Stable 208 x 341 mm base plate
- **Drilling table can be angled from 45° to + -45°**
- Includes **vice**

360°

5 speed selections

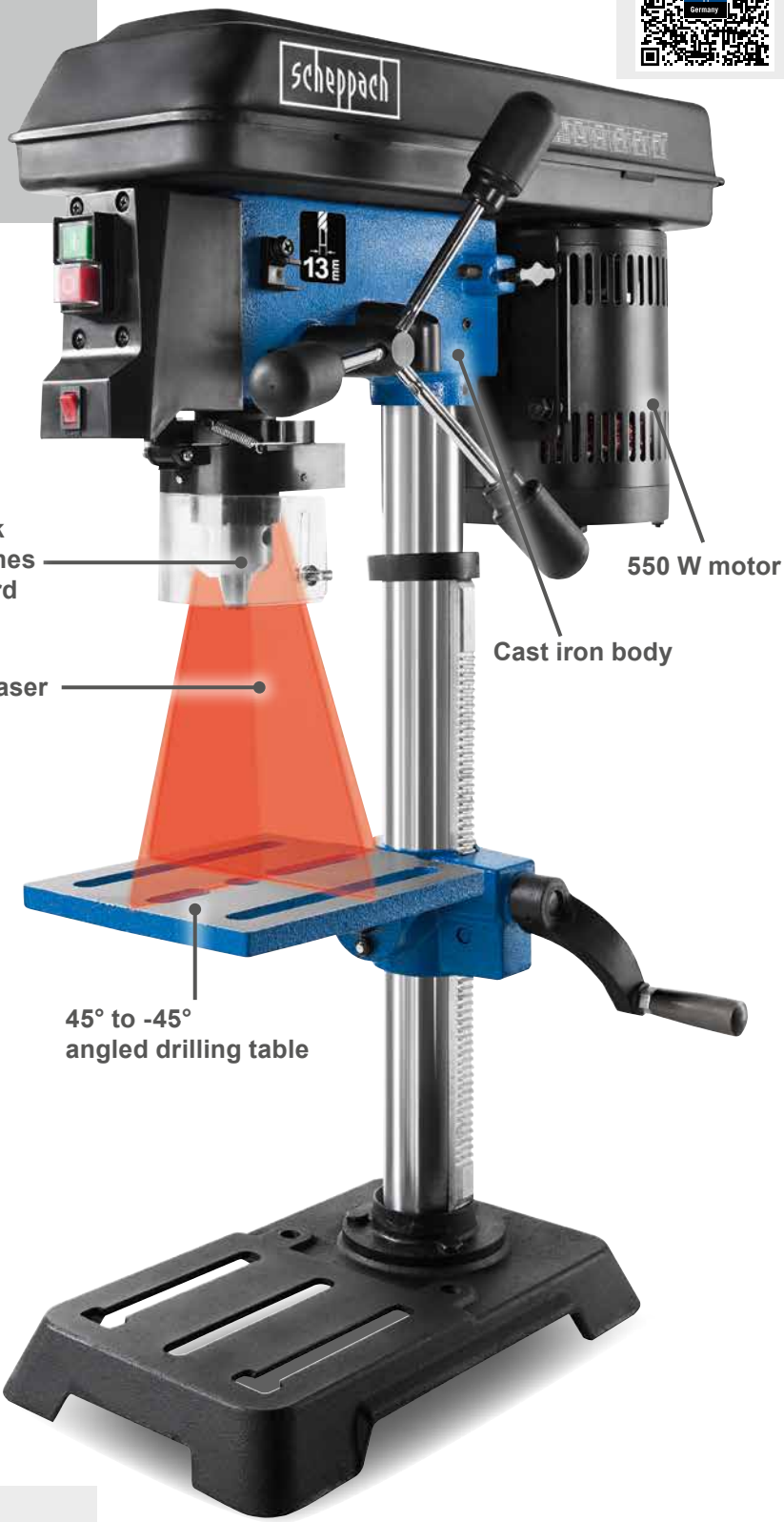

INCLUDED

SPECIFICATIONS

Dimensions L x W x H	490 x 220 x 735 mm
Table size	194 x 165 mm
Table tilt	45° – 0 – 45°
Speed range	510 – 2430 rpm
Chuck capacity	1.5 – 13 mm
Max. chuck to table	305 mm
Max. chuck to base	405 mm
Motor	230 V~
Input	550 W

LOGISTICAL DATA

Weight net / gross	22 / 24 kg
Packaging dimensions	605 x 390 x 305 mm
Article number	4906807901
Barcode	4046664036432
20 Container	378 pcs
40 Container	790 pcs
40 HQ Container	872 pcs

DP19VARIO

PROFESSIONAL PILLAR DRILL

- **Quick-lock chuck** comes as standard
- **Variable speed from 440 to 2580 rpm** to suit wood, metal & plastic
- **Chuck capacity 1.5 – 13 mm**
- Sturdy **cast iron construction**
- Excellent, value for money bench mounted workshop tool
- Powerful **550 W motor**
- **Digital speed display**

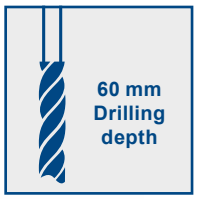

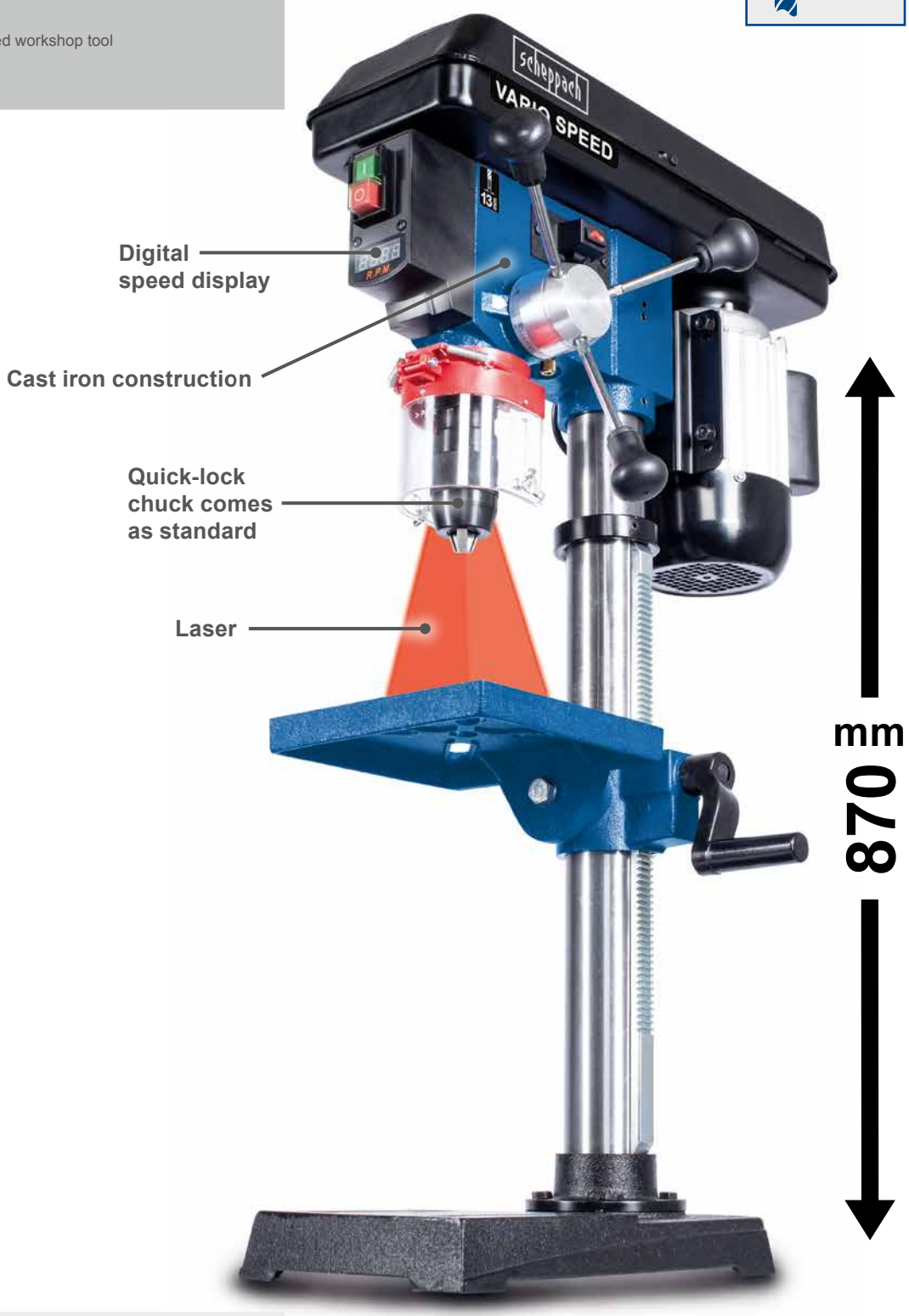

360°

SPECIFICATIONS

Dimensions L x W x H	340 x 500 x 870 mm
Table size	190 x 190 mm
Table tilt	45° – 0 – 45°
Speed range	440 – 2580 rpm
Chuck capacity / type	1.5 – 13 mm / quick-lock chuck
Max. chuck to table	350 mm
Max. chuck to base	465 mm
Motor	230 – 240 V~
Input	550 W

LOGISTICAL DATA

Weight net / gross	27 / 29 kg
Packaging dimensions	710 x 480 x 280 mm
Article number	5906820901
Barcode	4046664091417
20 Container	252 pcs
40 Container	504 pcs
40 HQ Container	584 pcs

selber machen
PRAXISTEST
SEHR GUT
★★★★★
scheppach
DP18Vario
Heft 10/21

PROFESSIONAL PILLAR DRILL

- **Quick-release drill chuck** as standard
- **Continuous speed control from 440 to 2580 min^{-1}** for timber, metal and all conventional plastics
- Drill chuck capacity from 1 to 16 mm
- Robust **cast iron construction**
- Excellent value for money
- High-performance **550 W motor**
- **Table extension with support roller, positioning laser and LED work light as standard**

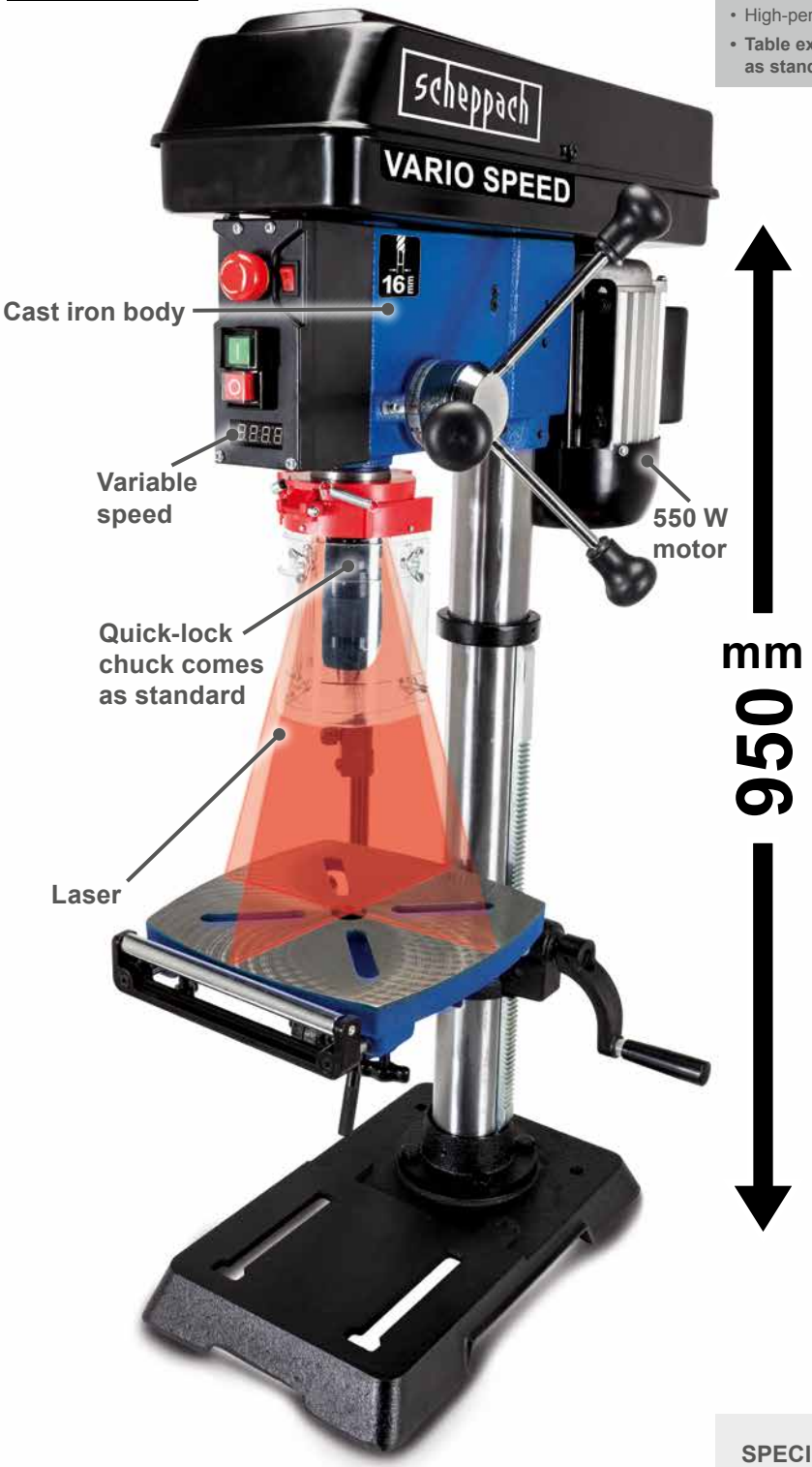

OPTIONAL ACCESSORY

BENCH VICE

Article number: 7906800701
Barcode: 4046664037606

LOGISTICAL DATA

Weight net / gross	38.5 / 41 kg
Packaging dimensions	750 x 500 x 290 mm
Article number	5906807901
Barcode	4046664045328
20 Container	230 pcs
40 Container	460 pcs
40 HQ Container	550 pcs

SPECIFICATIONS

Dimensions L x W x H	540 x 390 x 950 mm
Table size	240 x 240 mm
Table tilt	45° – 0 – 45°
Speed range	440 – 2580 rpm (variable speed)
Chuck capacity / type	1 – 16 mm / quick-lock chuck
Max. chuck to table	325 mm
Max. chuck to base	495 mm
Motor	230 – 240 V~
Input	S1 550 W, S2 10min 750 W

MT150

OPTIONAL ACCESSORY

CUTTING DISC
Ø 355 x 25.4 mm

Article number: 5903702701
Barcode: 4046664038085

355 MM CUT OFF SAW

- Ideal for clean and **precise cuts in metal**
- Powerful **2600 W motor with 4200 rpm**
- 355 mm cutting wheel, **max. cutting height 115 mm**
- **Tilt angle from 0 to 45 ° for mitre cuts**
- Enclosed cutting wheel guard for safe work
- **Spindle lock** for a quick and easy change of the cutting wheel
- Stable and yet transportable with a weight of 12.9 kg
- **Including soft start**

SPECIFICATIONS

Dimensions L x W x H	620 x 270 x 605 mm
Disc diameter	355 x 25.4 mm
Max. Cutting capacity at 90°	Ø 115 mm / 115 x 115 mm / 137 x 100 mm
Swivel range	45° – 0° – 30°
No load speed	4200 rpm
Motor	220 – 240 V~ / 50 Hz
Input	2600 W

LOGISTICAL DATA

Weight net / gross	12.9 / 14.6 kg
Packaging dimensions	550 x 310 x 410 mm
Article number	5903703901
Barcode	4046664139393
20 Container	415 pcs
40 Container	850 pcs
40 HQ Container	1000 pcs

METAL BAND SAW

- Powerful **1200 W motor** with consistent power
- **Suitable for both stationary and flexible use with both hands**
- Can be used from PVC to stainless steel with **material thicknesses up to 127 x 127 mm**
- Two insulated handles, one of which is adjustable, so that the saw always lies comfortably in the hand
- **Variable cutting speeds from 0.7 to 2.4 m/s** for different materials
- Light and handy for universal use
- **Heavy-duty work table for reliable stability** with new fixing mechanism
- **Including saw band, LED work lamp, Allen key and 2.2 m cable**

OPTIONAL ACCESSORIES

SAW BLADE
1140 x 12.7 x 0.65 mm / 10 / 14 T

Article number: 7901506701
Barcode: 4046664070993

SPECIFICATIONS

Dimensions L x W x H	648 x 291 x 573 mm
Swivel range	0° – 45°
Saw blade length	1141 mm
Cutting speed	0.7 – 2.4 m/s
Cutting-Ø max.	80 mm
Cutting height / width: 90° / 90°	127 / 127 mm
Cutting height / width: 45° / 45°	41.5 / 127 mm
Motor	220 – 240 V~ / 50 Hz
Input	1200 W

LOGISTICAL DATA

Weight net / gross	13.6 / 15.3 kg
Packaging dimensions	380 x 360 x 565 mm
Article number	5901508901
Barcode	4046664122364
20 Container	368 pcs
40 Container	744 pcs
40 HQ Container	872 pcs

CB01 / CB02

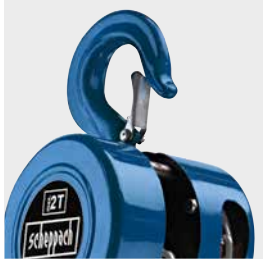

SPECIFICATIONS

	CBO1	CB02
Dimensions L x W x H	3100 x 140 x 130 mm	3100 x 140 x 130 mm
Lift capacity	1000 kg	2000 kg
Lifting height	3000 mm	3000 mm

LOGISTICAL DATA

	CB01	CB02
Weight net / gross	9.5 / 10 kg	13.4 / 13.9 kg
Packaging dimensions	250 x 180 x 170 mm	270 x 185 x 170 mm
Article number	4907401000	4907402000
Barcode	4046664015307	4046664015314
20 Container	2500 pcs	1900 pcs
40 Container	2800 pcs	2150 pcs
40 HQ Container	2800 pcs	2150 pcs

CHAIN HOIST

- **1000 kg** maximum lift capacity (CB01)
- **2000 kg** maximum lift capacity (CB02)
- **3000 mm** lifting height
- Ideal for lifting, moving, positioning and securing loads
- Controlled lifting and lowering facility
- Long operating chain
- **Hook with safety latch**

HRS250 / HRS400

ELECTRIC CABLE HOIST

- Max load capacity – **125 kg single cable and 250 kg** double cable (HRS250)
- Max load capacity – **200 kg single cable and 400 kg** double cable (HRS400)
- Lifting height – **12 metres** single cable and **6 metres** double cable
- Easy to install
- **Supplied with special fixing clamps**

LOGISTICAL DATA

	HRS250	HRS400
Weight net / gross	10.9 / 12.5 kg	15.5 / 17.5 kg
Packaging dimensions	420 x 140 x 235 mm	475 x 258 x 160 mm
Article number	4906904000	4906905000
Barcode	4046664015284	4046664015291
20 Container	1560 pcs	1114 pcs
40 Container	1560 pcs	1114 pcs
40 HQ Container	1560 pcs	1114 pcs

SPECIFICATIONS

	HRS250	HRS400
Dimensions L x W x H	400 x 130 x 180 mm	460 x 160 x 220 mm
Load capacity without return pulley	125 kg	200 kg
Load capacity including return pulley	250 kg	400 kg
Lifting height without return pulley	12 m	12 m
Lifting height including return pulley	6 m	6 m
Motor	230 V~	230 V~
Input	530 W	780 W

FS3600

920 MM STONE CUTTING MACHINE

- Cut large-format tiles with an **edge length of 920 mm or 650 mm when cutting diagonally**
- **The mobile cutting head** provides better control during cutting
- **Swivel-mounted cutting head** enables mitre cuts
- **Makes mitre and plunge cuts possible**
- Easy handling
- High-performance induction motor with heat protection
- **Impressive cutting length (920 mm) and cutting height (36 mm)**
- **Robust steel construction**
- **2 guide rails** for perfect cutting results
- **Customisable laser** for precise indication of the cutting edge
- Foldable base frame with travel fixture
- **2 table width extensions** to increase the support area for large work pieces

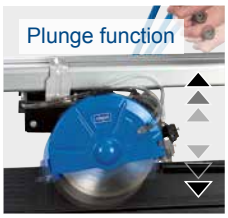

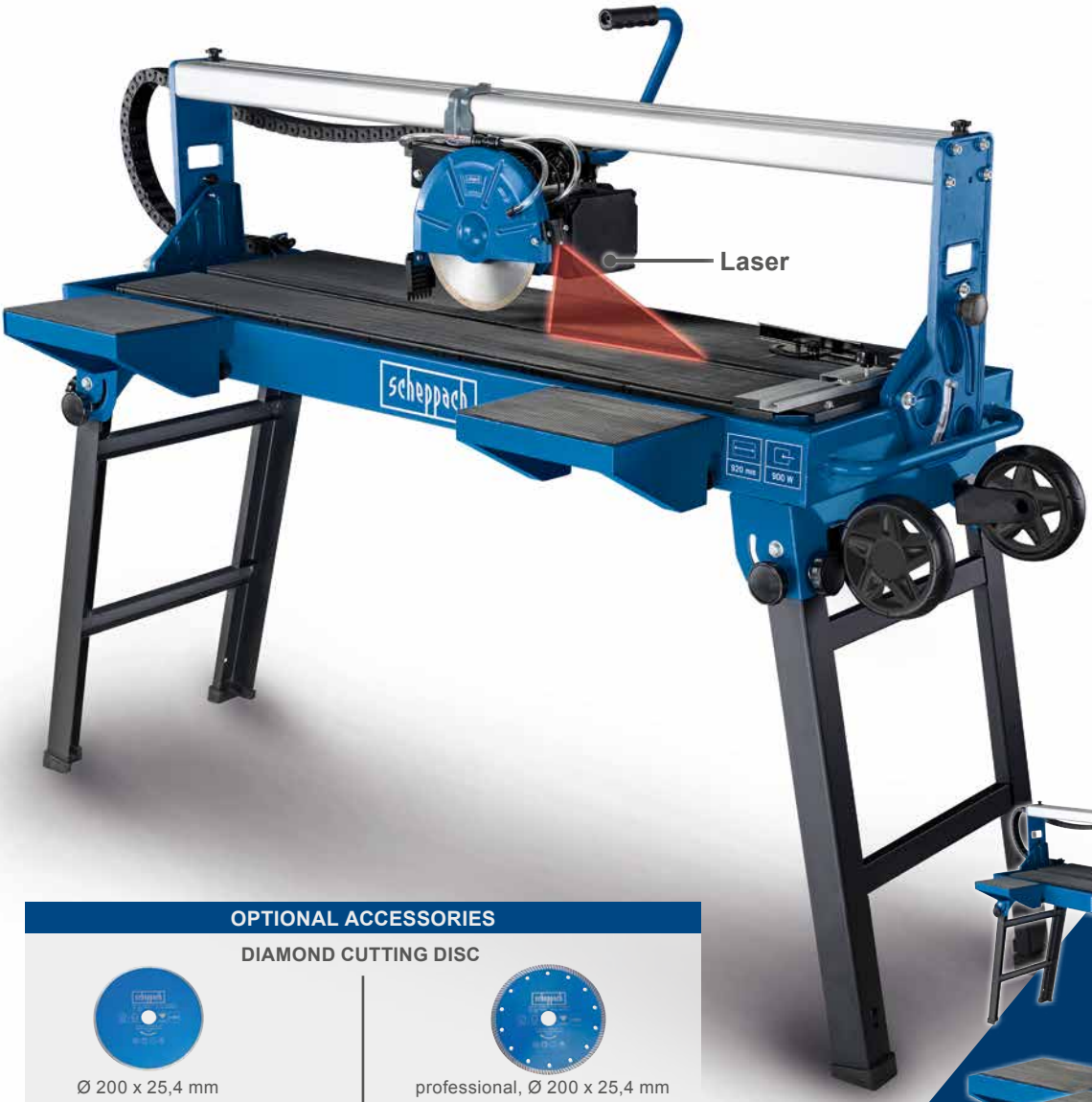

INCLUDED

OPTIONAL ACCESSORIES

DIAMOND CUTTING DISC

Ø 200 x 25,4 mm
Article number: 7906700705
Barcode: 4046664039686

professional, Ø 200 x 25,4 mm
Article number: 7906700703
Barcode: 4046664037439

SPECIFICATIONS

Dimensions L x W x H	1560 x 440 x 1140 mm
Table size	1290 x 400 mm
Cutting disc diameter	200 mm
Water	30 L
Cutting length	920 mm
Cutting height 90°	36 mm
Cutting height 45°	29 mm
Motor	230 V~
Input	900 W

LOGISTICAL DATA

Weight net / gross	50 / 59 kg
Packaging dimensions	1530 x 540 x 585 mm
Article number	5906706901
Barcode	4046664034315
20 Container	42 pcs
40 Container	90 pcs
40 HQ Container	120 pcs

1200 MM STONE CUTTING MACHINE

- Cut large-format tiles with an **edge length of 1200 mm or 850 mm when cutting diagonally**
- **The mobile cutting head** provides better control during cutting
- **Swivel-mounted cutting head** enables mitre cuts
- **Makes mitre and plunge cuts possible**
- Easy handling
- High-performance induction motor with heat protection
- **Impressive cutting length (1200 mm) and cutting height (40 mm)**
- Robust steel construction
- **2 guide rails** for perfect cutting results
- Customisable laser for precise indication of the cutting edge
- Foldable base frame with travel fixture
- **2 table width extensions** to increase the shelving area for large work pieces

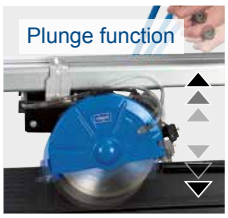

OPTIONAL ACCESSORIES

DIAMOND CUTTING DISC
Ø 230 x 25.4 mm
Article number: 7906700704
Barcode: 4046664039648

DIAMOND CUTTING DISC
Professional Ø 180 x 22.2 mm
Article number: 3906705701
Barcode: 4046664034865

DIAMOND CUTTING DISC
Ø 180 x 22.2 mm
Article number: 3906705050
Barcode: 4046664014065

SPECIFICATIONS

Dimensions L x W x H	1845 x 440 x 1155 mm
Table size	1377 x 400 mm
Cutting disc diameter	230 mm
Water	40 L
Cutting length	1200 mm
Cutting height 90°	40 mm
Cutting height 45°	34 mm
Motor	230 V~
Input	1200 W

LOGISTICAL DATA

Weight net / gross	57 / 66 kg
Packaging dimensions	1830 x 540 x 585 mm
Article number	5906707901
Barcode	4046664034322
20 Container	36 pcs
40 Container	78 pcs
40 HQ Container	100 pcs

HSM3500

360 MM STONE CUTTING MACHINE

- **Cutting height up to 110 mm** for all materials
- Cut large-format tiles and stone with an **edge length of 700 mm or 535 mm when cutting diagonally**
- Work table with four-way ball bearing guide and non-slip rubber mat
- **Cutting length max. 700 mm**
- **Saw head can be continuously adjusted from 0° to 45°**
- Large rubberised work area
- Integrated water pump ensures cooling water supply
- **Diamond cutting wheel diameter 360 x 25.4 mm**
- Foldable base frame and travel fixture for easy transport
- **Angular stop with degree adjustment**

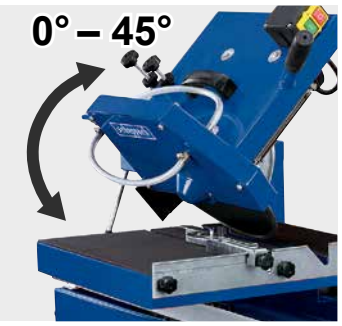

OPTIONAL ACCESSORIES

DIAMOND CUTTING WHEEL
for dry cuts
Ø 350 x 25.4 mm
Article number: 7906700701
Barcode: 4014915090571

DIAMOND CUTTING WHEEL - SEGMENTED
for wet cuts
Ø 350 x 25.4 mm
Article number: 7906700702
Barcode: 4014915090588

SPECIFICATIONS

Dimensions L x W x H	1150 x 520 x 1210 mm
Table size	535 x 430 mm
Cutting disc diameter	360 mm
Cutting height 90°	110 mm
Cutting height 45°	72 mm
Motor	230 V~
Input	2200 W

LOGISTICAL DATA

Weight net / gross	72 / 88 kg
Packaging dimensions	1125 x 560 x 550 mm
Article number	5906709901
Barcode	4046664141013
20 Container	60 pcs
40 Container	126 pcs
40 HQ Container	168 pcs

330 MM STONE CUTTER

- Lightweight and extremely stable and with precise cutting ability
- **Capable of cutting composite blocks and most paving blocks on the market**
- Heavy duty construction
- Accurate cuts every time
- **Long life blades**. The blades can be turned quickly and easily
- Spring loaded suspending table ensures an exact cut

SPECIFICATIONS

Dimensions L x W x H	790 x 260 x 562 mm
Table height	120 mm
Cutting length max.	330 mm
Cutting height max.	140 mm
Cutting height min.	25 mm
Quantity of knives	2

LOGISTICAL DATA

Weight net / gross	41 / 42.5 kg
Packaging dimensions	830 x 295 x 595 mm
Article number	5908501900
Barcode	4046664024026
20 Container	187 pcs
40 Container	377 pcs
40 HQ Container	486 pcs

DH1600MAX

10 J ROTARY AND DEMOLITION HAMMER

- **10 Joule impact force** for universal use
- Powerful **1600 W motor**
- **Two functions for versatile work** (impact drilling and chiselling)
- **Max. impact frequency of 3800/min**
- **Anti-vibration control**
- Easy tool change thanks to **SDS-Max clamping system**
- **Plastic case** for convenient transport and storage
- Including pointed and flat chisels, LED and a tube of lubricating grease

OPTIONAL ACCESSORIES

DRILL SET

Ø 16 | 18 | 20 mm, L 320 mm

Article number: 7907900002
Barcode: 4046664036357

FLAT- & POINT CHISEL SET

Ø 18 mm, L 350 mm

Article number: 7907900001
Barcode: 4046664036340

SPECIFICATIONS

Dimensions L x W x H	460 x 95 x 380 mm
Impact force	10 Joule
Drilling capacity in concrete max. Ø	40 mm
Motor	230 - 240 V~
Input	1600 W

LOGISTICAL DATA

Weight net / gross	7.3 / 11 kg
Packaging dimensions	410 x 126 x 370 mm
Article number	5907903901
Barcode	4046664143246
20 Container	900 pcs
40 Container	1864 pcs
40 HQ Container	2186 pcs

DH1300PLUS

5 J ROTARY AND DEMOLITION HAMMER

- **Anti-Vibration control** ensures convenient working
- **5 Joules to power through tough demolition jobs**
- Powerful **1250 W motor**
- Four functions for maximum efficiency and performance: **drilling – hammer drilling – chiselling – rotary chiselling. With or without chisel lock**
- Incredible hammer impact frequency of 4500/min
- **Plastic case provides convenient transport and storage**
- **Depth stop, drill-set, flat and point chisel set included**
- **Adjustable additional handle for fatigue-free and comfortable working**

OPTIONAL ACCESSORIES

SDS-PLUS DRILL SET

Ø 8 | 10 | 12 mm, L 150 mm

Article number: 7907900004
Barcode: 4046664044987

SDS-PLUS FLAT + POINT CHISEL SET

Ø 13,5 mm, L 250 mm

Article number: 7907900003
Barcode: 4046664044970

360°

SDS plus

SPECIFICATIONS

Dimensions L x W x H	362 x 243 x 114 mm
Impact force	5 Joules
Impact rating	4500/min
Speed	850 rpm
Working capacity max. Ø	30 mm
Motor	220 – 240 V~
Input	1250 W

LOGISTICAL DATA

Weight net / gross	4.9 / 7.4 kg
Packaging dimensions	410 x 120 x 330 mm
Article number	5907902901
Barcode	4046664044529
20 Container	1460 pcs
40 Container	3050 pcs
40 HQ Container	3200 pcs

AB1500X

20 J DEMOLITION HAMMER

- Powerful **20 Joules** for universal use
- Powerful **1300 watt motor**
- Quick and easy tool change with the **SDS Max drill chuck**
- **Anti-vibration handle**
- **Plastic case** for easy transport and storage
- Thanks to the compact and slim design, areas that are difficult to access can also be processed
- **Including sharp and flat chisel**

SDS max

SPECIFICATIONS

Dimensions l x w x h	470 x 240 x 95 mm
Impact force	20 joule
Impact rating	4100/min
Motor	230 – 240 V~
Input	1300 W

LOGISTICAL DATA

Weight net / gross	6,0 / 9,5 kg
Packaging dimensions	490 x 320 120 mm
Article number	5908207901
Barcode	404666416339
20 Container	1342 pcs
40 Container	2780 pcs
40 HQ Container	2780 pcs

50 J DEMOLITION HAMMER

- **Supplied with 2 chisels and metal case**
- **50 Joules** of impact energy
- **Quick and easy chisel changes**
- **Soft-grip D-handle** for a comfortable grip
- **Compact, streamlined design allows access in confined areas**

OPTIONAL ACCESSORIES

FLAT CHISEL
Ø 30 mm, L 390 mm

Article number: 3908201108
Barcode: 4046664014287

POINT CHISEL
Ø 30 mm, L 390 mm

Article number: 3908201109
Barcode: 4046664014294

AB1600

360°

SPECIFICATIONS

	AB1600	AB1700
Dimensions l x w x h	652 x 157 x 276 mm	652 x 157 x 276 mm
Impact force	50 joule	50 joule
Impact rating	2000/min	2000/min
Motor	230 V~	230 V~
Input	1600 W	1700 W

LOGISTICAL DATA

	AB1600	AB1700
Weight net / gross	16 / 20 kg	14 / 20.5 kg
Packaging dimensions	700 x 165 x 280 mm	700 x 165 x 295 mm
Article number	5908201901	5908203901
Barcode	4046664020264	4046664043201
20 Container	710 pcs	710 pcs
40 Container	1200 pcs	1200 pcs
40 HQ Container	1200 pcs	1200 pcs

AB1900

60 J DEMOLITION HAMMER

- Powerful **1900 W** and an impact force of **60 joules**
- **The switch lock for continuous operation allows working that does not tire you out**
- **Handle with soft grip** allows vibration-free working
- Thanks to the compact and slim design, areas that are difficult to access can also be processed
- **Including plastic box with wheels, sharp and flat chisel**
- Impact force 2000 bpm
- Robust housing, weight **16.5 kg**
- Quick and easy tool change via the **30 mm hexagon** tool holder

Transport case with wheels

OPTIONAL ACCESSORIES

FLAT CHISEL
Ø 30 mm, L 390 mm

Article number: 3908201108
Barcode: 4046664014287

POINT CHISEL
Ø 30 mm, L 390 mm

Article number: 3908201109
Barcode: 4046664014294

INCLUDED

360°

Impact force 60 Joule
Impact rating
2000 bpm

SPECIFICATIONS

Dimensions L x W x H	674 x 155.3 x 264.3 mm
Impact force	60 Joule
Motor	230 – 240 V~
Input	1900 W

LOGISTICAL DATA

Weight net / gross	16.5 / 22 kg
Packaging dimensions	910 x 205 x 370 mm
Article number	5908206901
Barcode	4046664068594
20 Container	465 pcs
40 Container	960 pcs
40 HQ Container	1120 pcs

65 L CONCRETE MIXER

- **Mixing drum of 63 litres with a capacity of max. 55 kg** and 27.5 rpm
- **220 watt electric motor**
- **Drum opening of 260 mm**
- **Drum swivel height of 620 mm** allows comfortable filling
- Easy transportation and stability thanks to the transport fixture and wide wheelbase
- Easy to maintain, durable and robust

SPECIFICATIONS

Dimensions L x W x H	1161 x 550 x 935 mm
Drum capacity	63 L
Max. drum speed	27.5 rpm
Motor	230 V~
Input	220 W
Drum diameter	260 mm

LOGISTICAL DATA

Weight net / gross	25 / 28 kg
Packaging dimensions	670 x 600 x 400 mm
Article number	5908408904
Barcode	4046664123149
20 container	135 pcs
40 container	285 pcs
40 HQ container	342 pcs

MIX125 / MIX140

125 / 140 L CONCRETE MIXERS

- **Welded drum base** provides better strength
- **125 L or 140 L large capacity** drum
- **Wheels for mobility**
- Large drum wheel for easy emptying
- **Labyrinth housing** to prevent water splashing and dual fans for better cooling
- **Durable and robust – ideal for professional use**
- **Cast iron gears (fully enclosed)**
- Easy to maintain

SPECIFICATIONS

	MIX125	MIX140
Dimensions L x W x H	1200 x 710 x 1400 mm	1210 x 840 x 1280 mm
Drum capacity	125 L	140 L
Drum speed max.	26.6 rpm	26.6 rpm
Motor	230 V~	230 V~
Input	550 W	550 W

LOGISTICAL DATA

	MIX125	MIX140
Weight net / gross	45 / 48 kg	47 / 50 kg
Packaging dimensions	770 x 700 x 450 mm	780 x 700 x 465 mm
Article number	5908403901	5908404901
Barcode	4046664022954	4046664036463
20 Container	120 pcs	120 pcs
40 Container	253 pcs	253 pcs
40 HQ Container	304 pcs	255 pcs

MIX160 / MIX180

PRE – ASSEMBLED

160 / 180 L CONCRETE MIXERS

- **Welded drum base** provides better strength
- **160 L or 180 L large capacity** drum
- **Wheels for mobility**
- **Large drum wheel** for easy emptying
- **Labyrinth housing** to prevent water splashing and dual fans for better cooling
- **Durable and robust – ideal for professional use**
- **Cast iron gears (fully enclosed)**
- Easy to maintain

OPTIONAL ACCESSORIES

SCREEN DRUM

Article number: 7908401702
Barcode: 4014915229070

360°

SPECIFICATIONS

	MIX160	MIX180
Dimensions L x W x H	1260 x 850 x 1350 mm	1260 x 850 x 1400 mm
Drum capacity	160 L	180 L
Drum speed max.	29.5 rpm	29.5 rpm
Motor	230 V~	230 V~
Input	650 W	800 W

LOGISTICAL DATA

	MIX160	MIX180
Weight net / gross	53,8 / 57,7 kg	56,5 / 60 kg
Packaging dimensions	760 x 740 x 515 mm	760 x 740 x 520 mm
Article number	5908405901	5908406901
Barcode	4046664036470	4046664036487
20 Container	84 pcs	
40 Container	192 pcs	
40 HQ Container	238 pcs	

HP1400S

OPTIONAL ACCESSORY

RUBBER PAD
black

Article number: 5904605012
Barcode: 4014915092667

SPECIFICATIONS

Dimensions L x W x H	1100 x 400 x 500 mm
Plate size	490 x 320 mm
Compaction force	13000 N
Travel speed	25 m/min
Compaction depth	25 cm
Capacity	79 cm^3
Engine	2.0 HP; petrol

13 kN PLATE COMPACTOR

- **Plate size: 490 x 320 mm**
- **Compacting pressure: 13000 N**
- **High feed speed** - to increase work performance
- Including travel fixture for transport also by one person
- **Including black rubber pad** for paving
- **Automatic feed - still allows the user trouble-free intervention in the direction of movement**

LOGISTICAL DATA

Weight net / gross	48 / 50 kg
Packaging dimensions	650 x 370 x 430 mm
Article number	5904615903
Barcode	4014915230212
20 Container	216 pcs
40 Container	432 pcs
40 HQ Container	432 pcs

HP1200S

PETROL

25 cm
Compaction depth
15000 N
Compaction force

INCLUDED

15 kN PLATE COMPACTOR

- **High-strength steel base** plate with curved edges
- Self-cleaning plate for best results
- **Plate size: 450 x 350 mm**
- **Compaction force: 15000 N**
- **Powerful 6.5 HP engine** for reliable operation
- **Fast travel speed of 25 m/min** for improved productivity
- **Includes foldaway wheels** for easy one-man transportation
- **Includes black rubber pad** for block paving work

SPECIFICATIONS

Dimensions L x W x H	1040 x 400 x 890 mm
Plate size	450 x 350 mm
Compaction force	15000 N
Travel speed	25 m/min
Working speed	600 m²/hour
Compaction depth	25 cm
Capacity	196 cm³
Engine	6.5 HP; petrol

LOGISTICAL DATA

Weight net / gross	58 / 60.5 kg
Packaging dimensions	570 x 380 x 670 mm
Article number	5904610903
Barcode	4046664085614
20 Container	180 pcs
40 Container	372 pcs
40 HQ Container	372 pcs

HP1800S

Travel fixture

Compact design

30 cm
Compaction depth
23000 N
Compaction force

23 kN PLATE COMPACTOR

- Plate size: 550 x 440 mm
- **Compaction force: 23000 N**
- **Compaction depth: 30 cm**
- Powerful **6.5 HP engine** for reliable operation
- **Automatic travel speed of 25 m/min** for improved productivity
- **High-strength steel base plate** with curved edges
- **Includes foldaway wheels** for easy one-man transportation
- **Includes black rubber pad** for block paving work

SPECIFICATIONS

Dimensions L x W x H	1025 x 440 x 930 mm
Plate size	550 x 440 mm
Compaction force	23000 N
Travel speed	25 m/min
Working speed	650 m²/hour
Compaction depth	30 cm
Capacity	196 cm³
Engine	6.5 HP; petrol

LOGISTICAL DATA

Weight net / gross	84 / 90 kg
Packaging dimensions	640 x 480 x 670 mm
Article number	5904611903
Barcode	4046664085621
20 Container	126 pcs
40 Container	252 pcs
40 HQ Container	252 pcs

17 kN PLATE COMPACTOR

- Plate size: 530 x 350 mm
- **Compaction force: 17000 N**
- **High feed speed** - to increase work performance
- **Including travel fixture** for transport also by one person
- **Includes black rubber pad** for block paving work
- **Automatic feed** - still allows the user trouble-free intervention in the direction of movement

LOGISTICAL DATA

Weight net / gross	57 / 60 kg
Packaging dimensions	710 x 400 x 505 mm
Article number	5904616903
Barcode	4046664144175
20 containers	176 pcs
40 containers	352 pcs
40 HQ containers	352 pcs

SPECIFICATIONS

Dimensions L x W x H	1140 x 410 x 840 mm
Plate size	530 x 350 mm
Compaction force	17000 N
Travel speed	25 m/min
Compaction depth	30 cm
Capacity	196 cm^3
Engine	5.6 HP; petrol

HP2200S

25 kN PLATE COMPACTOR

- Plate size: 550 x 440 mm
- **Compaction force: 25000 N**
- **Compaction depth: 35 cm**
- **Powerful 6.5 HP engine** for reliable operation
- **Automatic travel speed of 25 m/min** for improved productivity
- **High-strength steel base** plate with curved edges
- **Includes foldaway wheels** for easy one-man transportation
- **Includes black rubber pad** for block paving work

SPECIFICATIONS

Dimensions L x W x H	1025 x 440 x 930 mm
Plate size	550 x 440 mm
Compaction force	25000 N
Travel speed	25 m/min
Working speed	650 m²/hour
Compaction depth	35 cm
Capacity	196 cm³
Engine	6.5 HP; petrol

LOGISTICAL DATA

Weight net / gross	97.5 / 104 kg
Packaging dimensions	640 x 480 x 670 mm
Article number	5904612903
Barcode	4046664085638
20 Container	126 pcs
40 Container	235 pcs
40 HQ Container	235 pcs

23 kN PLATE COMPACTOR

- Plate size: 540 x 420 mm
- **Compacting pressure: 23000 N**
- Powerful **5.6 hp engine**
- **High feed speed** - to increase work performance
- **Including travel fixture** for transport also by one person
- **Including black rubber pad** for paving
- Automatic feed - still allows the user trouble-free intervention in the direction of movement

SPECIFICATIONS

Dimensions L x W x H	1140 x 400 x 840 mm
Plate size	540 x 420 mm
Compaction force	23000 N
Travel speed	15 m/min
Compaction depth	35 cm
Capacity	196 cm^3
Engine	5.6 HP; petrol

LOGISTICAL DATA

Weight net / gross	82.5 / 86.3 kg
Packaging dimensions	705 x 435 x 500 mm
Article number	5904617903
Barcode	4046664144199
20 Container	156 pcs
40 Container	312 pcs
40 HQ Container	312 pcs

HP2500S

40 cm
Compaction depth
30000 N
Compaction force

360°

INCLUDED

30 kN REVERSIBLE PLATE COMPACTOR

- Plate size: 630 x 400 mm
- **Compaction force: 30000 N**
- **Compaction depth: 40 cm**
- **Powerful 6.5 HP engine** for reliable operation
- **Automatic travel speed of 25 m/min** for improved productivity
- **High-strength steel base** plate with curved edges
- **Includes foldaway wheels** for easy one-man transportation
- **Includes black rubber pad** for block paving work

SPECIFICATIONS

Dimensions L x W x H	1150 x 690 x 870 mm
Plate size	630 x 400 mm
Compaction force	30000 N
Travel speed	25 m/min
Working speed	750 m²/hour
Compaction depth	40 cm
Capacity	196 cm³
Engine	6.5 HP; petrol

LOGISTICAL DATA

Weight net / gross	125 / 135 kg
Packaging dimensions	710 x 430 x 1000 mm
Article number	5904613903
Barcode	4046664085645
20 Container	84 pcs
40 Container	172 pcs
40 HQ Container	172 pcs

OPTIONAL ACCESSORY

RUBBER PAD
black

Article number: 5904605012
Barcode: 4014915092667

INCLUDED

30.5 kN REVERSIBLE PLATE COMPACTOR

- High-strength steel base plate with curved edges for superior performance
- **Self-cleaning plate for operator convenience**
- Highly manoeuvrable
- **Plate size: 730 x 450 mm**
- **Compaction force: 30500 N**
- **Powerful 9.0 HP engine** for reliable operation
- Faster travel speed – for improved productivity
- **Includes transport frame** for easy one-man transportation
- **Includes black rubber pad** for block paving work

SPECIFICATIONS

Dimensions L x W x H	1400 x 600 x 850 mm
Plate size	730 x 450 mm
Compaction force	30500 N
Travel speed	25 m/min
Working speed	405 m²/hour
Compaction depth	50 cm
Capacity	270 rpm
Engine	9.0 HP, petrol

LOGISTICAL DATA

Weight net / gross	161 / 173 kg
Packaging dimensions	780 x 480 x 1100 mm
Article number	5904605903
Barcode	4046664026891
20 Container	72 pcs
40 Container	138 pcs
40 HQ Container	N.A.

VS1000

VIBRATION RAMMER

- **Robust and easy to use**
- **Excellent running characteristics and handling**
- Perfectly balanced weight distribution
- **Excellent compaction performance of 10000 N**
- Optimum working speed
- **Wide range of applications**
- High reliability and durability
- Easy, safe transport

SPECIFICATIONS

Dimensions L x W x H	780 x 480 x 1150 mm
Working width (tamper plate)	345 x 285 mm
Impact force	10000 N
Compacting depth	40 – 60 mm
Vibration batch	450 – 650 vpm
Input	5.6 HP, petrol

LOGISTICAL DATA

Weight net / gross	78 / 88 kg
Packaging dimensions	570 x 510 x 990 mm
Article number	3908301915
Barcode	4046664012993
20 Container	88 pcs
40 Container	184 pcs
40 HQ Container	184 pcs

OPTIONAL ACCESSORIES

Drill Ø 100 mm, length 800 mm

Article number:
7904702701
Barcode:
4046664045526

Drill Ø 150 mm, length 800 mm

Article number:
7904702702
Barcode:
4046664045533

Drill Ø 200 mm, length 800 mm

Article number:
7904702703
Barcode:
4046664045540

EARTH AUGER INCLUDING 3 DRILLS

- Simple handling and maintenance
- Powerful 2-stroke petrol engine with 1.9 hp and 52 cm³
- Including 100, 150 and 200 mm drill bits
- Quick and easy drill bit change

FOR DRILLING

- ✓ Fence posts
- ✓ Plant seedlings
- ✓ Trees
- ✓ Foundations

MAX. DRILLING LENGTH 800 mm

INCLUDED

LOGISTICAL DATA

Weight net / gross	17 / 21 kg
Packaging dimensions	825 x 560 x 320 mm
Article number	5904704903
Barcode	4046664156673
20 Container	196 pcs
40 Container	399 pcs
40 HQ Container	456 pcs

SPECIFICATIONS

Dimensions L x W x H	540 x 310 x 1120 mm
Drilling speed	370 min^{-1}
Displacement	52 cm^3
Drill Ø	100, 150, 200 mm
RPM max.	9600 rpm
Engine	1.4 kW / 1.9 HP, 2-stroke

DP3000

300 kg DUMPER

- **Capable of transporting up to 300 kg of solid or bulk material**
- **Air-filled tyres and four wheel drive** for maximum traction
- Quick response, easy manoeuvrable
- The **large tipping container** is perfect for hauling earth, gravel, stone, rubble, bricks and anything else you wish to transport
- The lever located on the handlebar controls the direction of travel
- Transmission – **3 forward gears and 1 reverse gear**
- Tipping container – 912 x 650 x 560 mm
- Large, air-filled wheels for easy operation

360°

OPTIONAL ACCESSORIES

SNOW PLOW
100 x 50 cm

Article number: 7908800001
Barcode: 4046664042563

SPECIFICATIONS - ENGINE

Model	Single-cylinder; 4 stroke petrol engine
Input max.	5.6 HP
Displacement	196 cc

SPECIFICATIONS

Dimensions L x W x H	1380 x 760 x 1000 mm
Dimension container	910 x 650 x 575 mm
Loading capacity max.	300 kg
Tipping	hand
Transmission	gear
Forward speed max.	2.5 / 4.8 / 6.4 km/h
Reverse speed max.	2 km/h

LOGISTICAL DATA

Weight net / gross	143 / 167 kg
Packaging dimensions	1150 x 735 x 850 mm
Article number	5908802903
Barcode	4046664037989
20 Container	30 pcs
40 Container	64 pcs
40 HQ Container	96 pcs

400 kg TRACK DUMPER

- **Facilitates the transport of loads up to 400 kg**
- **Large tipping container** for solid or bulk material you wish to transport
- The driving direction can be easily controlled via the handle.
- Transmission - **3 forward gears & 1 reverse gear**
- Tipping container - 840 x 626 x 289 mm
- **115.8 L container volume**
- **Track drive for good traction** on slippery surfaces or muddy ground
- Ideal on construction sites or in horticulture

SPECIFICATIONS - ENGINE

Model	Single cylinder; 4 stroke petrol engine
Input max.	5.6 HP
Displacement	196 cc

SPECIFICATIONS

Dimensions L x W x H	1530 x 710 x 1050 mm
Dimension container	840 x 626 x 289 mm
Loading capacity max.	400 kg
Tipping	By hand
Transmission	gear
Forward speed max.	1.57 / 2.93 / 3.66 km/h
Reverse speed max.	1.14 km/h

LOGISTICAL DATA

Weight net / gross	176 / 214 kg
Packaging dimensions	1540 x 755 x 1110 mm
Article number	5908805904
Barcode	4046664134336
20 Container	20 pcs
40 Container	44 pcs
40 HQ Container	44 pcs

DP5000

500 kg TRACK DUMPER

- **Capable of transporting up to 500 kg** of solid or bulk material
- The large tipping container is perfect for hauling earth, gravel, stone, rubble, bricks and anything else you wish to transport
- **The lever located on the handlebar controls the direction of travel**
- Transmission – **3 forward gears and 1 reverse gear**
- Tipping container – **950 x 680 x 465 mm**
- **Drive tracks** for easy operation

SPECIFICATIONS - ENGINE

Model	Single-cylinder; 4 stroke petrol engine
Input max.	5.6 HP
Displacement	196 cc

SPECIFICATIONS

Dimensions L x W x H	1600 x 715 x 1030 mm
Dimension container	950 x 680 x 465 mm
Loading capacity max.	500 kg
Tipping	hydraulic
Transmission	gear
Forward speed max.	1.57 – 2.93 – 3.66 km/h
Reverse speed max.	1.14 km/h

LOGISTICAL DATA

Weight net / gross	255 / 290 kg
Packaging dimensions	1675 x 775 x 1115 mm
Article number	5908801903
Barcode	4046664026464
20 Container	20 pcs
40 Container	42 pcs
40 HQ Container	42 pcs

PAINT AND MORTAR STIRRER INCLUDING 2ND PADDLE

- Powerful **1200 / 1400 W motor**
- Variable speed 0 – 700 rpm (PM1200) and 0 – 760 rpm (PM1400)
- Sturdy **M14 thread**
- **Quick and easy paddle changes**
- Ideal for **mixing mortar, roughcast, paint, etc.**
- Soft-grip ergonomic D-handle for a comfortable and firm grasp
- **Included paint and mortar mixer**

OPTIONAL ACCESSORIES

MIXING PADDLE REPLACEMENT

Article number: 3907801009
Barcode: 4046664042372

SPECIFICATIONS

	PM1200	PM1400
Dimensions	315 x 200 x 875 mm	
Motor	220 – 240 V~	230 V~
Power	1200 W	1400 W
No load speed	0 – 700 min^{-1}	0-570 min^{-1} / 0-760 min^{-1}
Shaft length	K2: 580 mm; K5: 590 mm	
Tool connection thread	M14	

LOGISTICAL DATA

	PM1200	PM1400
Weight net / gross	5.7 / 6.6 kg	4.9 / 6.7 kg
Packaging dimensions	340 x 230 x 290 mm	
Article number	5907801901	5907805901
Barcode	4046664042198	4046664043867
20 Container	1060 pcs	
40 Container	2210 pcs	
40 HQ Container	2660 pcs	

PM1600

OPTIONAL ACCESSORIES

MIXING PADDLE REPLACEMENT

Article number: 5907800701
Barcode: 4046664063681

PAINT AND MORTAR STIRRER INCLUDING 2ND PADDLE

- Ideal for **mixing mortar, plaster, paint etc.**
- **2-speed gearbox** for high torque and mixing performance
- Continuously variable speed control 0 – 580 or 0 – 780 rpm
- Powerful **1600 W engine**
- Quick and easy change of the stirring attachment
- Ergonomic handles for convenient working
- Robust stirrer receptacle with **M14 thread**
- **Including second spiralled stirrer attachment**

360°

SPECIFICATIONS

Dimensions	310 x 190 x 330 mm
Motor	230 V~ / 50 Hz
Power	1600 W
Variable speed, two gears	0 – 580 / 0 – 780 rpm
Shaft length	590 mm
Tool connection thread	M14

LOGISTICAL DATA

Weight net / gross	6.9 / 7.6 kg
Packaging dimensions	340 x 230 x 350 mm
Article number	5907803901
Barcode	4046664043737
20 Container	910 pcs
40 Container	1890 pcs
40 HQ Container	2210 pcs

OPTIONAL ACCESSORIES

MIXING PADDLE REPLACEMENT SET

Article number: 5907802701
Barcode: 4046664043300

DOUBLE PAINT AND MORTAR STIRRER INCLUDING 2 PADDLES

- **2 counter-rotating stirrer rods for optimal mixing**
- Ideal for **mixing mortar, plaster, paint etc**.
- **Two stage speed control** up to 790 rpm
- Powerful **1800 W motor** with enough power reserves
- Ergonomic handles for convenient and fatigue-free working
- **Robust stirrer receptacle** with quick-change system
- **Easy change of the stirring attachment**
- **Including 2 mixing rods**

360°

SPECIFICATIONS

Dimensions L x W x H	310 x 190 x 890 mm
Motor	230 V~ / 50 Hz
Power	1800 W
Variable speed, two gears	0 – 450 / 0 – 790 rpm
Shaft length	570 mm
Tool connection thread	Quick release system

LOGISTICAL DATA

Weight net / gross	7.2 / 8.8 kg
Packaging dimensions	590 x 320 x 250 mm
Article number	5907802901
Barcode	4046664043072
20 Container	520 pcs
40 Container	1110 pcs
40 HQ Container	1300 pcs

ACS3000

AIRLESS PAINT SPRAY SYSTEM

- Powerful **750 W electric motor**
- **Max. flow rate 1.1 L/min** depending on the paint or liquid
- Variable pressure regulation up to 207 bar for optimal paint distribution
- **Extra-long 7.6 m spray hose** for extensive coverage
- Quick progress **possible - up to 350 m²/h**
- Greater efficiency, thanks to direct suction
- Non-tiring working, thanks to **lightweight spray attachment with 4-finger trigger**
- Paint spray system that is **compact and easy to transport**
- **Suitable for water and synthetic-based liquids**

Continuously variable pressure regulation

360°

LOGISTICAL DATA

Weight net / gross	8.3 / 9.5 kg
Packaging dimensions	295 x 285 x 420 mm
Article number	5906002901
Barcode	4046664073673
20 container	760 pcs
40 container	1480 pcs
40 HQ container	1750 pcs

SPECIFICATIONS

Dimensions L x B x H	245 x 195 x 255 mm
Maximum pressure	207 bar
Max. ground coverage	350 m²/h
Max. flow rate	1.1 L/min
Motor	220 – 240 V~ / 50 Hz
Motor output	650 – 750 W

POWER GENERATOR 700 W

- **63 cc, 2-stroke petrol engine**
- **700 W max. power output** – 680 W continuous output
- **Light and portable**
- **Standard 230 V socket with overload circuit breaker**
- Anti-vibration rubber feet, carry handle and pull starter

OPTIONAL ACCESSORIES

HUILE ULTRA PERFORMANTE À LONGUE DURÉE DE VIE SAE 5W-40
500 ml

Article number: 3906100701
Barcode: 4014915073512

SPECIFICATIONS ENGINE

Model	Single-cylinder; 2 stroke petrol engine
Capacity	63 cc
Tank capacity	4 L

SPECIFICATIONS - GENERATOR

Rated output / max. output	650 / 700 W
Socket	1 x 230 V~
AC frequency	50 Hz
Starter	Pull starter

LOGISTICAL DATA

Weight net / gross	16.5 / 17.5 kg
Packaging dimensions	425 x 350 x 355 mm
Article number	5906218901
Barcode	4046664067931
20 Container	520 pcs
40 Container	1080 pcs
40 HQ Container	1260 pcs

SG3200

POWER GENERATOR 2800 W

- **6.5 HP engine pull cable starter**
- Powerful and air cooled **4 stroke petrol engine with 196 cm³ displacement**
- **Max. 2800 W output power**, 2500 W rated output
- Two 230 V connections and one **12 V DC connector**
- Sturdy and **robust steel frame** with wheel kit and hinged handles
- **Integrated overload protection, voltmeter and low oil warning**

360°

OPTIONAL ACCESSORIES

OIL ULTRA PERFORMANCE LONGLIFE SAE 5W-40
500 ml

Article number: 3906100701
Barcode: 4014915073512

SPECIFICATIONS - ENGINE

Model	Single-cylinder; 4 stroke petrol engine
Max. engine power	6.5 HP
Displacement	196 cc
Starter	Pull starter
Tank capacity	15 L
Fuel consumption 2/3 load	1,39 L/h
Fuel consumption at max. load	3,89 L/h

COPPER COIL

- ✓ Long service life
- ✓ Better electric conductivity

SPECIFICATIONS - GENERATOR

Dimensions L x W x H	590 x 445 x 450 mm
Voltage control	AVR-System
Rated output / max. output	2500 / 2800 W
Socket	2 x 230 V~
AC frequency	50 Hz
Overload protection	Yes
Low oil warning	Yes
Voltmeter	Yes

LOGISTICAL DATA

Weight net / gross	43 / 47 kg
Packaging dimensions	605 x 445 x 450 mm
Article number	5906220903
Barcode	4046664095460
20 Container	200 pcs
40 Container	400 pcs
40 HQ Container	450 pcs

POWER GENERATOR 2800 W

- **15 HP petrol engine with electric start or pull starter as alternative**
- Powerful and air cooled **4 stroke petrol engine with 420 cm³ displacement**
- **Max. 5500 W output power, 5000 W rated output**
- **A 400 V~ connection, a 230 V~ connection and a 12 V DC connector** offering maximum flexibility
- Sturdy and **robust steel frame** with wheel kit and hinged handles
- **25 litre petrol tank allows using the generator for hours**
- **Integrated overload protection, voltmeter and low oil warning**

360°

SPECIFICATIONS - ENGINE

Model	Single-cylinder 4 stroke petrol engine
Max. engine power	15 HP
Displacement	420 cc
Starter	Pull starter, electric starter
Tank capacity	25 L

SPECIFICATIONS - GENERATOR

Dimensions L x W x H	720 x 665 x 610 mm
Voltage control	AVR-System
230 V / 400 V max. output / rated	5000 / 5500 W
Socket	1 x 230 V~ / 1 x 400 V~
AC frequency	50 Hz
Overload protection	Yes
Low oil warning	Yes
Voltmeter	Yes

LOGISTICAL DATA

Weight net / gross	85 / 89 kg
Packaging dimensions	815 x 560 x 560 mm
Article number	5906219903
Barcode	4046664095484
20 Container	132 pcs
40 HQ Container	272 pcs

SG5200D

DIESEL POWER GENERATOR 5000 W

- **Diesel generator with electric starter**
- **Max. 5000 W output power**
- **One 400 V~ connection, two 230 V~ connections and a 12 V DC connector** for maximum flexibility
- Stable and robust housing with travel wheels and handle
- **16 L tank for hours of generator use**

Electric start

SPECIFICATIONS - ENGINE

Model	Single-cylinder 4 stroke Diesel engine
Max. engine power	7.7 HP
Displacement	418 cc
Starter	electric starter
Tank capacity	16 L
Fuel consumption at 2/3 load	1.43 L/h

SPECIFICATIONS - GENERATOR

Dimensions L x W x H	920 x 520 x 750 mm
Voltage control	AVR-System
Rated / Max. output	3000 W (230V~) / 4200 W (400 V~) 3300 W (230V~) / 5000 W (400 V~)
Socket	2 x 230 V~ / 1 x 400 V~
AC frequency	50 Hz
Overload protection	Yes
Low oil warning	Yes
Voltmeter	Yes

LOGISTICAL DATA

Weight net / gross	148 / 160 kg
Packaging dimensions	935 x 710 x 535 mm
Article number	5906222903
Barcode	4046664095583
20 Container	72 pcs
40 Container	144 pcs
40 HQ Container	144 pcs

INVERTER POWER GENERATOR 2000 W

- **Maximum power of 2000 W** for devices with sensitive electronics, power tools, etc.
- Equipped with **two 230 V~ AC sockets and two 2.1 A USB ports (quick charging)**
- **Displacement of 79 cm³**, air cooled 4 stroke petrol engine with pull cable starter
- Compact design in carrying case size made of impact-resistant plastic with handle
- **Automatic shutdown in case of oil shortage**
- A fuel tank of 4.1 L and an engine oil capacity of 300 ml
- **Clean sine wave for sensitive devices** such as laptops, televisions, tablets or smartphones
- **Low noise level of 64,1 dB(A)***

*Noise levels may vary depending on distance and location and were measured at 25% load and at a distance of 7 metres from the control panel.

OPTIONAL ACCESSORIES

ENGINE OIL ULTRA PERFORMANCE LONGLIFE SAE 5W-40
500 ml

Article number: 3906100701
Barcode: 4014915073512

SPECIFICATIONS – ENGINE

Model	Single cylinder; 4 stroke petrol engine
Max. engine power	3 PS
Displacement	79 cm³
Starting system	Pull cable starter
Tank capacity	4.1 L

LOGISTICAL DATA

Net / gross weight	17.5 / 19 kg
Packaging dimensions	570 x 320 x 485 mm
Article number	5906226901
EAN	4046664134602
20 container	288 pcs
40 container	576 pcs
40 HQ container	735 pcs

SPECIFICATIONS – POWER GENERATOR

Dimensions L x W x H	520 x 270 x 440 mm
Voltage control	Inverter
Nominal power/Maximum power	1600 / 2000 W
Voltage output	230 V~
AC frequency	50 Hz
Overload protection	Yes
Low oil warning	Yes

SG1600i

INVERTER POWER GENERATOR 1020 W

- **1020 W generator with inverter technology** for devices with sensitive electronics, power tools etc.
- **53.5 cc displacement, air-cooled 4-stroke petrol engine for reliable performance**
- Fuel consumption at 2/3 load: 0.68 l/h with a run time of 5.9 h
- Features a **230 V alternating current socket and pull starter**
- Comfortable operation: power saving mode, power indicator, overload display, oil protection display
- Compact and lightweight design with carrying handle for easy transport
- Sturdy rubber feet for secure positioning

OPTIONAL ACCESSORIES

ENGINE OIL ULTRA PERFORMANCE LONGLIFE SAE 5W-40
500 ml

Article number: 3906100701
Barcode: 4014915073512

SPECIFICATIONS - ENGINE

Model	Single-cylinder; 4 stroke petrol engine
Max. engine power	2,04 HP
Displacement	53.5 cc
Starter	Pull starter
Tank capacity	4 L

LOGISTICAL DATA

Weight net / gross	12.7 / 14.3 kg
Packaging dimensions	420 x 320 x 398 mm
Article number	5906223903
Barcode	4046664095989
20 Container	455 pcs
40 Container	980 pcs
40 HQ Container	1174 pcs

SPECIFICATIONS - GENERATOR

Dimensions L x W x H	410 x 310 x 383 mm
Voltage control	Inverter
Rated output / max. output	1000 / 1020 W
Socket	230 V~
AC frequency	50 Hz
Overload protection	Yes
Low oil warning	Yes

OPTIONAL ACCESSORIES

ENGINE OIL ULTRA PERFORMANCE LONGLIFE SAE 5W-40
500 ml

Article number: 3906100701
Barcode: 4014915073512

360°

INVERTER POWER GENERATOR 3400 W

- Sturdy and robust steel frame protects vital components
- Max 5.1 HP petrol engine with easy pull start system
- 3400 W maximum power output – 2800 W continuous output
- Air cooled 4 stroke engine
- 7.8 litre fuel tank
- Low noise level of 70 dB(A)*
  *Noise levels may vary depending on distance and location and were measured at 25% load and at a distance of 7 meters from the control panel.

Max. 5.1 HP petrol engine with pull start system

Variable transport handle

SPECIFICATIONS - ENGINE

Model	Single-cylinder; 4 stroke petrol engine
Max. engine power	5.1 HP
Displacement	212 cc
Starter	Electric starter & pull starter
Tank capacity	7.4 L
Fuel consumption load	2.1 L/h

LOGISTICAL DATA

Weight net / gross	43.8 kg / 47 kg
Packaging dimensions	580 x 508 x 450 mm
Article number	5906217901
Barcode	4046664072362
20 Container	180 pcs
40 Container	380 pcs
40 HQ Container	475 pcs

SPECIFICATIONS - GENERATOR

Dimensions L x W x H	579 x 425 x 443 mm
Voltage control	Inverter
Rated output / max. output	3000 / 3400 W
Socket	2 x 230 V~
AC frequency	50 Hz
Overload protection	Yes
Low oil warning	Yes
Voltmeter	Yes

BSG600 MAX

OUTPUT OPTIONS

DC | USB A/C | 12 V Power outlet | 230 V Power outlet

BSG 600 MAX – PORTABLE POWER STATION

- Mobile power station
- Li-Ion battery, 600W max. power and 269 Wh
- Can be charged via solar panel, power pack or in a car
- Built-in protection from short-circuiting, excess voltage, low voltage and overloading
- Connection options for DC, 230 and 12 Volt as well as USB devices (USB-A, USB-C)
- Integrated LED light with SOS function
- Easy to transport, thanks to carrying handle and a weight of only 3.2 kg
- Operation without noise and emissions, absolutely no harmful exhaust fumes
- Pure sine wave, particularly suitable for sensitive devices such as mobile phones, laptops and tablets

SPECIFICATIONS

Dimensions L x W x H	233 x 147 x 200 mm
INPUT POWER	
Power supply	17,5 Vdc, 7,2A
BATTERY	
Nominal power	269 Wh
Rated voltage	3.7 V / 2.6 Ah
Loading time with solar panel	ca. 3 – 4 h, 80% (max. 100 W)
Loading time with charging	ca. 5 – 6 h (max. 65 W)
WORKING CONDITIONS	
Humidity	10% –90% RH
Operating temperature	-15°C – 50°C

LOGISTICAL DATA

Weight net / gross	3.2 / 4.2 kg
Packaging dimensions	280 x 185 x 275 mm
Article number	5912803901
Barcode	4046664190233
20 Container	1984 pcs
40 Container	4320 pcs
40 HQ Container	4320 pcs

OUTPUT POWER

AC OUTPUT	
Rated voltage	230 V~
Nominal power	300 W – max. 600 W
Frequency	50 Hz
DC 12V OUTPUT	
Rated voltage	12 V
Rated current	10 A
USB A OUTPUT	
Supports quick charging	Apple, Samsung
Rated voltage	12 V
Rated current	2 A
USB C OUTPUT	
Supports quick charging	PD 3.0
Rated voltage	5 V, 9 V, 12 V, 15 V, 20 V, 3A

VERSATILE POWER SOURCE

CHARGING CAPACITY UP TO

Mobile phone	Camera	Tablet	Mini fridge	Laptop	Drone	Lamp
25 X	12 X	8 X	5 H	3 X	5 X	24 H

Compared with conventional generators, the BSG600Max operates **without noise and emissions** and does **not require petrol or other fuel.**

BSG600 MAX	Petrol / Diesel generator
No emissions No noise Lightweight	Harmful exhaust fumes Noisy Heavy

The **power station** is also suitable for **sensitive electronic devices** because it provides a **pure sine wave.**

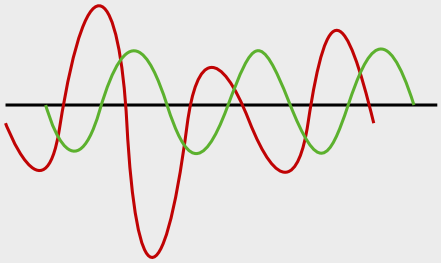

BSG600 MAX

Petrol / Diesel generator

PRODUCT DETAILS

- 269 Wh Capacity
- Quick charging (USB-A, USB-C)
- 1000 Watt Inverter
- Compact design
- Overload protection
- 230 V Power outlet

3 CHARGING MODES

- Mains adapter
- Vehicle connection
- Self-sufficient via solar panel

BSG1200 MAX

OUTPUT OPTIONS

DC | USB A/C | 12 V Power outlet | 230 V Power outlet

BSG 1200 MAX – PORTABLE POWER STATION

- Mobile power station
- Li-Ion battery, 1200W max. power and 577 Wh
- Can be charged via solar panel, power pack or in a car
- Built-in protection from short-circuiting, excess voltage, low voltage and over-loading
- Connection options for DC, 230 and 12 Volt as well as USB devices (USB-A, USB-C)
- Integrated LED light with SOS function
- Easy to transport, thanks to carrying handle and a weight of only 6.2 kg
- Operation without noise and emissions, absolutely no harmful exhaust fumes
- Pure sine wave, particularly suitable for sensitive devices such as mobile phones, laptops and tablets

SPECIFICATIONS

Dimensions L x W x H	290 x 190 x 240 mm
INPUT POWER	
Power supply	17,5 Vdc, 7,2A
BATTERY	
Nominal power	577 Wh
Rated voltage	3.7 V / 2.6 Ah
Loading time with solar panel	ca. 7 – 8 h, 80% (max. 200 W)
Loading time with charging	ca. 6 – 7 h (max. 126 W)
WORKING CONDITIONS	
Humidity	10% –90% RH
Operating temperature	-15°C – 50°C

LOGISTICAL DATA

Weight net / gross	6.2 / 7.4 kg
Packaging dimensions	330 x 230 x 325 mm
Article number	5912804901
Barcode	4046664190240
20 Container	1211 pcs
40 Container	2700 pcs
40 HQ Container	2700 pcs

OUTPUT POWER

AC OUTPUT	
Rated voltage	230 V~
Nominal power	600 W – max. 1200 W
Frequency	50 Hz
DC 12V OUTPUT	
Rated voltage	12 V
Rated current	10 A
USB A OUTPUT	
Supports quick charging	Apple, Samsung
Rated voltage	12 V
Rated current	2 A
USB C OUTPUT	
Supports quick charging	PD 3.0
Rated voltage	5 V, 9 V, 12 V, 15 V, 20 V, 5A

VERSATILE POWER SOURCE

CHARGING CAPACITY UP TO

Mobile phone	Camera	Tablet	Mini fridge	Laptop	Drone	Lamp
50 X	24 X	16 X	10 H	6 X	10 X	48 H

Compared with conventional generators, the BSG1200 Max operates without noise and emissions and does not require petrol or other fuel.

BSG1200 MAX	Petrol / Diesel generator
No emissions No noise Lightweight	Harmful exhaust fumes Noisy Heavy

The power station is also suitable for sensitive electronic devices because it provides a pure sine wave.

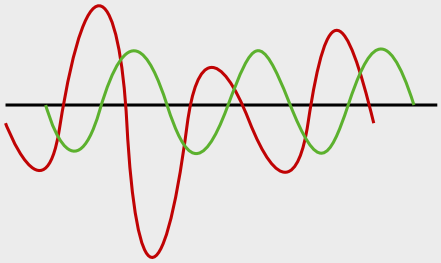

PRODUKT-DETAILS

- 577 Wh Capacity
- Quick charging: USB-A, USB-C
- 1000 Watt Inverter
- Compact design
- Overload protection
- 2 x 230 V Power outlet

3 CHARGING MODES

- Mains adapter
- Vehicle connection
- Self-sufficient via solar panel

AIR FORCE 5

AC/DC PORTABLE COMPRESSOR

- Compact mobile compressor – **ideal for the car**
- **12 V and 230 Volt operation**
- The tool of choice to inflate tires in case of a car breakdown
- **Pressure can be digitally measured and set in advance**
- **Including 600 mm compressed air hose and 4 nozzles** for car/bike valves, swimming aids, balls, etc.
- **Cable and accessories can be safely stored directly on the device**
- **Automatic shut-off when the specified pressure has been reached**

LOGISTICAL DATA

Weight net / gross	1.6 / 1.9 kg
Packaging dimensions	275 x 123 x 210 mm
Article number	5906142901
EAN	4046664125143
20 container	approx. 3440 units
40 container	approx. 7200 units
40 HQ container	approx. 7920 units

SPECIFICATIONS

Dimensions L x W x H	270 x 200 x 115 mm
Max. working pressure	8 bar
Intake capacity	36.5 L/min
AC cable length	1.8 m
DC cable length	4 m
Hose length	0.6 m
Power supply	220 – 240 V~ / 12 V car

Optional accessories can be found on page 184

AIR CASE

OIL – FREE

360°

INCLUDED

SPECIFICATIONS

Dimensions L x W x H	550 x 155 x 360 mm
Tank capacity	2 L
Operating pressure max.	8 bar
Intake capacity	180 L/min
Motor	220 - 240 V~
Input	1100 W

LOGISTICAL DATA

Weight net / gross	8 / 9 kg
Packaging dimensions	560 x 155 x 365 mm
Article number	5906118901
Barcode	4046664040309
20 Container	688 pcs
40 Container	1408 pcs
40 HQ Container	1692 pcs

PORTABLE COMPRESSOR INCLUDES ACCESSORY KIT

- Compact and easy to carry, **weighing only 8 kg**
- Oil-free and low-maintenance compressor
- Maximum working pressure of **8 bar with pressure regulation**
- **Intake capacity of 180 L/min for quick filling**
- **2 L Vessel pressure**
- **Including 12-piece accessory set that comes with an air blow gun and a tyre inflation pressure gauge**
- Integrated storage space for accessories

Optional accessories can be found on page 184

HC06

6 L COMPRESSOR INCLUDES ACCESSORY KIT

- **Light 8.2 kg weight**
- Compressor features a long-life, **oil-free, maintenance-free pump for convenience**
- **Intake capacity 200 L/min**
- **Powerful 1200 W**
- **Tank capacity 6 L**
- **Operating pressure max. 8 bar**
- **Comes with large accessory kit**
- Handle for easy transport
- Secure stand with rubber feet

SPECIFICATIONS

Dimensions L x W x H	350 x 324x 276 mm
Tank capacity	6 L
Operating pressure max.	8 bar
Intake capacity	200 L/min
Sound level	97 dB(A)
Motor	220 – 240 V~ / 50 Hz
Input	1200 W

LOGISTICAL DATA

Weight net / gross	8.2 / 9.2 kg
Packaging dimensions	365 x 340 x 305 mm
Article number	5906153901
Barcode	4046664174431
20 Container	672 pcs
40 Container	1386 pcs
40 HQ Container	1584 pcs

Optional accessories can be found on page 184

24 L COMPRESSOR INCLUDES ACCESSORY KIT

- **Tank capacity of 24 L**
- **Max. working pressure of 8 bar**
- **Oil-free, thus low-maintenance and durable**
- Pressure gauge to regulate the working pressure
- A quick coupling
- **Coiled compressed air hose of 5 m**
- Travel fixture for easy transport
- **Including an accessory set of 13 pieces: tyre inflation gauge, air blow gun, hose (HC30o)**

Quick-release coupling

Pressure gauge

SPECIFICATIONS

Dimensions L x W x H	550 x 280 x 565 mm
Tank capacity	24 L
Operating pressure max.	8 bar
Intake capacity	200 L/min
Sound level	97 dB
Motor	230 V~ / 50 Hz
Input	1100 W

LOGISTICAL DATA

	HC30o includes accessory kit	HC30ox
Weight net / gross	18.3 / 20 kg	18.3 / 19.3 kg
Packaging dimensions	580 x 255 x 570 mm	
Article number	5906146901	5906146904
Barcode	4046664137788	4046664137795
20 Container	320 pcs	320 pcs
40 Container	656 pcs	656 pcs
40 HQ Container	736 pcs	736 pcs

Optional accessories can be found on page 184

HC26

24 L COMPRESSOR

- **Tank capacity 24 L**
- Max. 8 bar vessel pressure
- **Oil lubricated pump**
- Pressure gauge and quick-release coupling for regulated working pressure
- **With wheels for easy manoeuvrability**
- **Includes 230 ml DAB46 compressor oil**

360°

SPECIFICATIONS

Dimensions L x W x H	560 x 310 x 570 mm
Tank capacity	24 L
Operating pressure max.	8 bar
Intake capacity	220 L/min
Sound level	93 dB(A)
Motor	230 V~ / 50 Hz
Input	1500 W

LOGISTICAL DATA

Weight net / gross	21 / 22.9 kg
Packaging dimensions	580 x 250 x 580 mm
Article number	5906135901
Barcode	4046664072980
20 Container	340 pcs
40 Container	720 pcs
40 HQ Container	720 pcs

Optional accessories can be found on page 184

360°

SPECIFICATIONS

Dimensions L x W x H	710 x 410 x 680 mm
Tank capacity	50 L
Operating pressure max.	8 bar
Intake capacity	220 L/min
Sound level	93 dB(A)
Motor	230 V~ / 50 Hz
Input	1500 W

LOGISTICAL DATA

Weight net / gross	30 / 33 kg
Packaging dimensions	760 x 325 x 655 mm
Article number	5906103901
Barcode	4046664020271
20 Container	156 pcs
40 Container	324 pcs
40 HQ Container	420 pcs

50 L COMPRESSOR

- **Tank capacity of 50 litres**
- **Pressure gauge to regulate the working pressure**
- **Two quick couplings** allow a rapid tool change
- Max. working pressure of **8 bar**
- Travel fixture for easy transport
- **Compressor oil 250 ml included**

Optional accessories can be found on page 184

HC52DC

360°

50 L COMPRESSOR

- A compact and powerful unit with **412 L/min air displacement**
- **8 bar** (approx. 115 psi) maximum working pressure
- Directly driven by a high performance **3.0 HP peak motor**
- The **50 litre tank** is very quickly re-charged
- The **double cylinder air compressor** ensures a high intake capacity
- Able to power nearly all air tools
- **2 quick-release couplings** for regulated working pressure
- With wheels and handle for easy manoeuvrability
- Includes 250 ml compressor oil

SPECIFICATIONS

Dimensions L x W x H	720 x 420 x 740 mm
Tank capacity	50 L
Operating pressure max.	8 bar
Intake capacity	412 L/min
Sound level	97 dB(A)
Motor	230 V~ / 50 Hz
Input	2200 W

LOGISTICAL DATA

Weight net / gross	41 / 45.5 kg
Packaging dimensions	770 x 380 x 735 mm
Article number	5906101901
Barcode	4046664020103
20 Container	135 pcs
40 Container	270 pcs
40 HQ Container	270 pcs

Optional accessories can be found on page 184

HC53DC

DOUBLE CYLINDER

360°

50 L COMPRESSOR

- Twin cylinder ensures a powerful **suction capacity of 412 L/min**
- Maximum working pressure of **10 bar**
- Powerful **3.0 hp engine**
- **Tank capacity of 50 litres**
- Pressure gauge to regulate the working pressure
- Connection to a standard power supply of 230 V
- **Two quick couplings** allow a rapid tool change
- **Travel fixture** for easy transport
- Anti-vibration rubber feet for safe storage

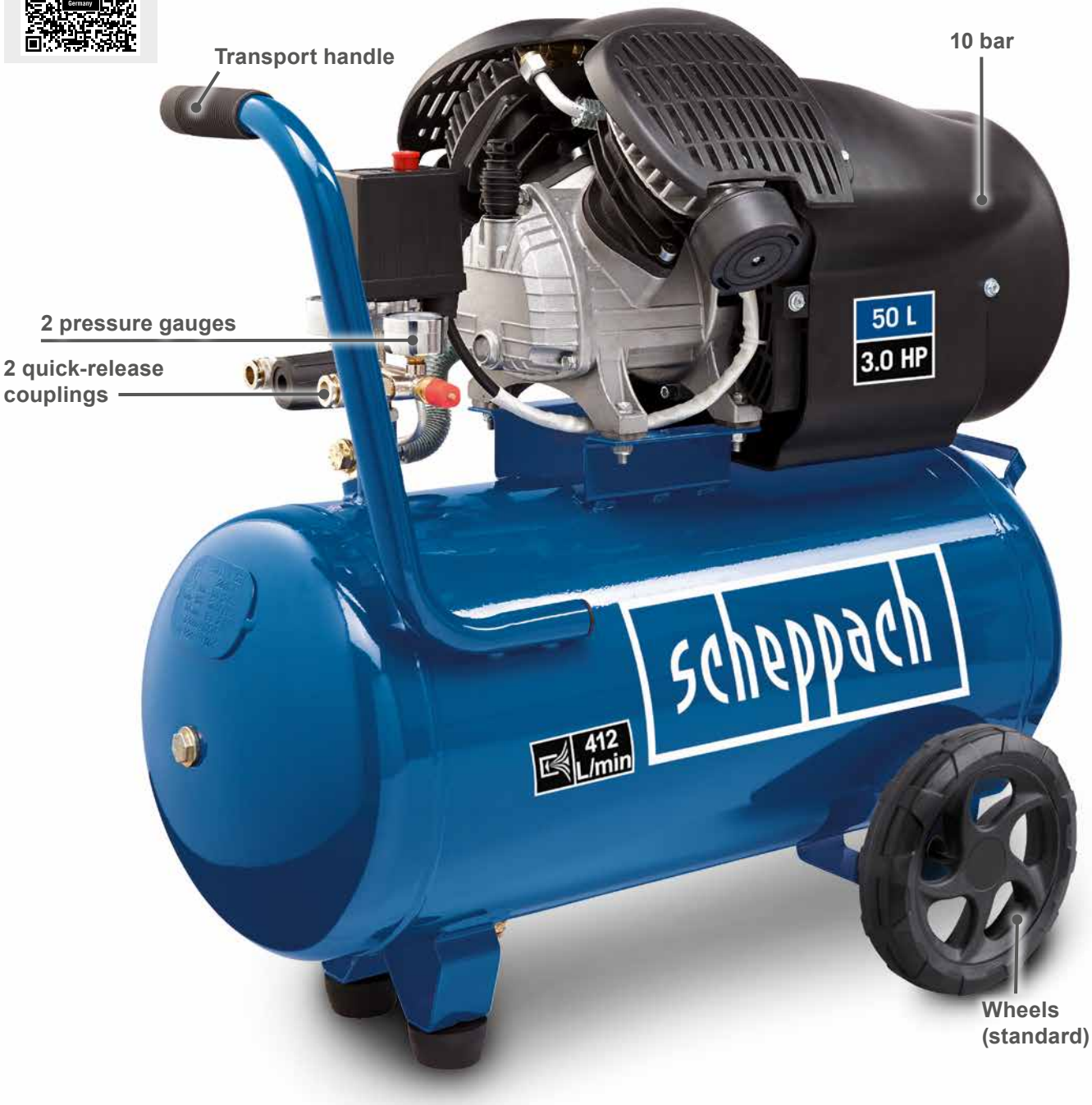

SPECIFICATIONS

Dimensions L x W x H	740 x 420 x 720 mm
Tank capacity	50 L
Operating pressure max.	10 bar
Intake capacity	412 L/min
Sound level	97 dB(A)
Motor	230 V~
Input	2200 W

LOGISTICAL DATA

Weight net / gross	41.5 / 46 kg
Packaging dimensions	770 x 375 x 730 mm
Article number	5906102901
Barcode	4046664020110
20 Container	135 pcs
40 Container	270 pcs
40 HQ Container	270 pcs

Optional accessories can be found on page 184

HC550TC

360°

100 L BELT DRIVE COMPRESSOR

- **Powerful 550 L/min air displacement**
- High-efficiency **induction motor**
- **Max. 10 bar vessel pressure**
- Powerful **3 HP motor**
- **The 3 cylinder air compressor** ensures a high intake capacity and quick filling of the vessel
- Pressure gauge and quick-release coupling for regulated working pressure
- **100 L tank**
- With wheels for easy manoeuvrability
- Anti-vibration feet
- **2 quick-release couplings** enable the use of two air tools simultaneously

SPECIFICATIONS

Dimensions L x W x H	1025 x 475 x 840 mm	
Tank capacity	100 L	
Operating pressure max.	10 bar	
Intake capacity	550 L/min	
Sound level	97 dB(A)	
Motor	230 V~ / 50 Hz	400 V~ / 50 Hz
Input	2200 W	

LOGISTICAL DATA

	230 V~	400 V~
Weight net / gross	80 / 85,6 kg	
Packaging dimensions	1090 x 420 x 840 mm	
Article number	5906147901	5906147902
Barcode	4046664139423	4046664139416
20 Container	54 pcs	
40 Container	108 pcs	
40 HQ Container	162 pcs	

Optional accessories can be found on page 184

50 L COMPRESSOR

- Large vertical **50 litre vessel**
- **220 L/min intake capacity** for air-intensive work
- Powerful **1.5 KW / 2 hp engine**
- Suitable for a large number of compressed air tools, such as tyre inflators, blow-out pistols and many more
- **Oil-free and low-maintenance compressor**
- **Two quick release-couplings** allow rapid tool changes
- **Max. working pressure of 10 bar**
- **Travel fixture** for easy transport
- **Hoop guard** for increased safety

SPECIFICATIONS

Dimensions L x W x H	364 x 346 x 955 mm
Tank capacity	50 L
Operating pressure max.	10 bar
Intake capacity	220 L/min
Sound level	97 dB(A)
Motor	230 V / 50 Hz
Input	1500 W (2 HP)

LOGISTICAL DATA

Weight net / gross	23.8 / 26.5 kg
Packaging dimensions	335 x 325 x 975 mm
Article number	5906152901
Barcode	4046664154242
20 Container	294 pcs
40 Container	588 pcs
40 HQ Container	588 pcs

Optional accessories can be found on page 184

HC80V

80 L VERTICAL COMPRESSOR

- **Tank capacity of 80 litres**
- **Max. intake capacity 310 L/min**
- Suitable for many compressed air tools, such as tyre inflators, blow-out pistols and many more
- Pressure gauge to regulate the working pressure
- **Two quick couplings** allow a rapid tool change
- **Max. working pressure of 10 bar**
- **Travel fixture** for easy transport

3 pressure gauges

360°

LOGISTICAL DATA

Weight net / gross	51.6 / 55 kg
Packaging dimensions	530 x 455 x 1095 mm
Article number	5906143901
EAN	4046664128380
20 container	110 pcs
40 container	220 pcs
40 HQ container	220 pcs

PRODUCT DATA

Dimensions L x W x H	530 x 470 x 1070 mm
Tank capacity	80 L
Max. working pressure	10 bar
Intake capacity	310 L/min
Sound power level (LpA)	97 dB(A)
Engine	230 V~ / 50 Hz
Motor power	1800 W

Optional accessories can be found on page 184

80 L VERTIKAL KOMPRESSOR

- 1600 W engine, **oil-free and low-maintenance**
- Vertical **80 litre vessel**
- Max. working pressure of 14 bar
- **Two quick couplings** allow a rapid tool change
- Thanks to its vertical construction, it doesn't require as much space as conventional compressors
- **Travel fixture for easy transport**
- Suitable for nearly all compressed air tools, such as tyre inflators, blow-out pistols and many more

Compact design - vertical- means less space is needed

2 pressure gauges

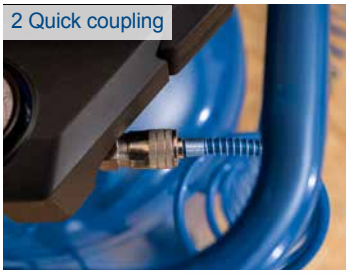
2 Quick coupling

LOGISTICAL DATA

Weight net / gross	44 / 47 kg
Packaging dimensions	445 x 550 x 1044 mm
Article number	5906151901
Barcode	4046664154235
20 Container	100 pcs
40 Container	210 pcs
40 HQ Container	250 pcs

SPECIFICATIONS

Dimensions L x W x H	426 x 516 x 983 mm
Tank capacity	80 L
Operating pressure max.	14 bar
Intake capacity	330 L/min
Sound level	97 dB(A)
Motor	230 V~ / 50 Hz
Input	1600 W

Optional accessories can be found on page 184

HC20Si Twin

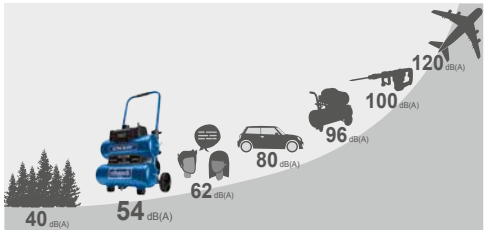

20 L ULTRA SILENT DOUBLE CYLINDER COMPRESSOR

- **Super silent compressor with a 750 W electric motor**
- **Sound level of 54 dB (at 7 m)**
- Up to 80% quieter than other compressors
- **Tank capacity of 20 L**
- **Max. working pressure of 10 bar**
- **Oil-free and low-maintenance compressor**
- **A 200% lifetime** compared to standard compressors
- **Intake capacity of 200 L/min**
- **Anti-vibration rubber feet** for safe storage and a silent working experience
- Easy tool change thanks to **2 pressure gauges and 1 quick coupling**
- Cable and compressed air hose holder
- **Compact design with 2 tanks, stable wheels and handle**
- Connection to a standard power supply of 230 V

SPECIFICATIONS

Dimensions L x W x H	500 x 420 x 540 – 830 mm
Tank capacity	20 L
Max. working pressure	10 bar
Intake capacity	200L/min
Sound pressure level	54 dB(A) (in 7 m)
Motor	230 V~ / 50 Hz
Motor power	750 W

LOGISTICAL DATA

Weight net / gross	30 / 31.5 kg
Packaging dimensions	520 x 450 x 580 mm
Article number	5906145901
Barcode	4046664134978
20 container	216 pieces
40 container	464 pieces
40 HQ container	464 pieces

EXAMPLES OF USE

SUITABLE FOR

Nailing/ stapling

Compressed air impact wrench

Paint spray gun

Tyre inflation

Compressed air ratchet

Compressed air rotary sander

Sandblasting gun

Extendable transport handle

quick coupling

2 pressure gauges

dual tank

wheels (standard)

PRODUCT DETAILS

Up to 1000 hours service life

Suitable for high demands – inflating lorry tyres

200 l/min suction capacity at a max. operating pressure of 10 bar

1 x quick coupling

20 l compressed air tank

Oilfree

Low-maintenance

2 x pressure gauges

Extremely quiet at only 54 dB (80% quieter than conventional compressors with comparable power)

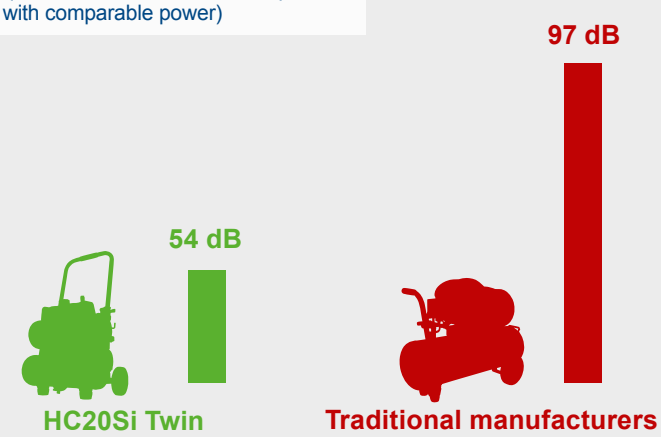

Compact design: Thanks to the layout of the air pressure tanks and dual cylinder motor, the compressor is a true space-saving miracle!

Trolley function with extendable transport handle for mobile working. Hose and cable can be stored on the unit.

Optional accessories can be found on page 184

HC25Si

24 L SUPER SILENT DOUBLE CYLINDER COMPRESSOR

- Silent compressor with an **1100 W electric motor**
- **Tank capacity of 24 L with an intake capacity of 230 L/min**
- **Max. working pressure of 8 bar**
- Oil-free and low-maintenance compressor
- An anti-vibration rubber foot for safe storage and smooth working
- **2 pressure gauges and 2 quick couplings** allow a rapid tool change
- Connection to a standard power supply of 230 V
- **Large wheels with a diameter of 175 mm** and a handle for easy transport
- **Low noise level of 60 dB(A)***

*Noise levels may vary depending on distance and location and were measured at 25% load and at a distance of 7 metres from the control panel.

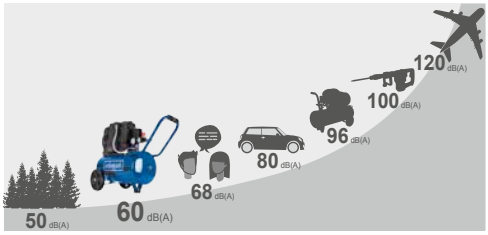

SPECIFICATIONS

Dimensions L x W x H	730 x 333 x 603 mm
Tank capacity	24 L
Operating pressure max.	8 bar
Intake capacity	230 L/min
Sound level (LpA)	approx. 60 dB(A) (7m distance)
Motor	230 V~ / 50 Hz
Input	1100 W

LOGISTICAL DATA

Weight net / gross	21 / 22.7 kg
Packaging dimensions	565 x 250 x 570 mm
Article number	5906140901
Barcode	4046664114314
20 Container	320 pcs
40 Container	656 pcs
40 HQ Container	736 pcs

Optional accessories can be found on page 184

50 L SUPER SILENT DOUBLE CYLINDER COMPRESSOR

- Silent compressor with a **1500 W electric motor**
- **Tank capacity of 50 L with an intake capacity of 300 L/min**
- **Max. working pressure of 8 bar**
- Oil-free and low-maintenance compressor
- An anti-vibration rubber foot for safe storage and smooth working
- **2 pressure gauges and 2 quick couplings** allow a rapid tool change
- Connection to a standard power supply of 230 V
- **Large wheels with a diameter of 175 mm** and a handle for easy transport
- **Low noise level of 60 dB(A)***

*Noise levels may vary depending on distance and location and were measured at 25% load and at a distance of 7 metres from the control panel.

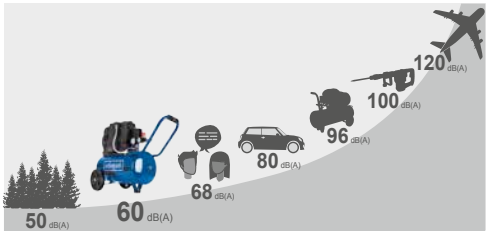

SPECIFICATIONS

Dimensions L x W x H	880 x 390 x 675 mm
Tank capacity	50 L
Max. working pressure	8 bar
Intake capacity	300 L/min
Sound pressure level (LpA)	approx. 60 dB(A) (7m distance)
Motor	230 V~ / 50 Hz
Motor power	1500 W

LOGISTICAL DATA

Weight net / gross	28 / 30 kg
Packaging dimensions	740 x 330 x 650 mm
Article number	5906141901
Barcode	4046664123422
20 container	177 pcs
40 container	378 pcs
40 HQ container	440 pcs

Optional accessories can be found on page 184

COMPRESSOR AIR TOOLS

	Description	Article number	Barcode
15 metre rubber air hose	**For performance and safety in professional garages and workshops** • High quality rubber hose • 8 mm (5/16") bore inner core • Working pressure up to 10 bar / 145 PSI	7906100711	4046664040132

	Description	Article number	Barcode
Oil ultra performance	**Longlife SAE 5W-40** • 500 ml	3906100701	4014915073512

	Description	Article number	Barcode
Compressed air distributors (Quick coupling connections)	**Allows connection of several tools to a single outlet** 2-way air manifold • Durable and lightweight aluminium construction • For longer life and smoother operation than standard couplings	7906100722	4046664042006
	4-way air manifold • Durable and lightweight aluminium construction • For longer life and smoother operation than standard couplers	7906100725	4046664042112

	Description	Article number	Barcode
Accessory set compressed air drill drive	**This compact, lightweight and reversible unit is ideal for general workshop, garage or factory use** • Easy-to-use forward / reverse switch • Compact push handle design • Working pressure is 91 PSI (6.3 bar) • Average air consumption: 141 L/min • Includes 10 x HSS drill bits, 6 x CrV bits and 1 bit holder, lubricator, oil, wrench for chuck • Transport case	7906100714	4046664041924

	Description	Article number	Barcode
Accessory set compressed air paint spray gun	**Popular choice for auto refinishing and manufacturing trades** • Air consumption: 120 – 205 L/min • Working pressure: 2 – 3.5 bar • Paint container capacity is 600 ml • Nozzle continuously adjustable from round to wide jet • Includes adjustment knobs for air, liquid and spray pattern	7906100721	4046664041993

	Description	Article number	Barcode
Accessory set compressed air chisel hammer	**Ideal for cutting metal sheet, removing stubborn fittings and minor demolition work** • Delivers 4500 blows per minute • Working pressure is 91 PSI (6.3 bar) • Average air consumption: 79.2 L/min • Polished metal body with protective rubber grip • This robust air hammer is supplied complete with a selection of 5 chisels • Kit includes: 5 chisels and oil • Transport case	7906100716	4046664041948

	Description	Article number	Barcode
1/2" Air impact wrench kit	**Ideal for changing tyres, general assembly work and other workshop applications** • 7000 rpm helps provide high power fastening • 312 Nm working torque • Average air consumption: 141 L/min • 1-hand operation-forward / reverse switch for quick and easy switching • Kit includes: impact wrench, 10 x 1/2" sockets, extension, lubricator and oil • Transport case	7906100717	4046664041955

	Description	Article number	Barcode
Accessory set compressed air ratchet	**A versatile, reversible tool ideal for automotive and workshop use** • Delivers 68 Nm of torque for fast removal of stubborn fasteners • Average air consumption: 77 L/min • Conveniently located forward and reverse switch for quick direction changes • Includes 7 x 1/2" sockets, 1 x 1/2" extension, 1 x universal joint, 1 x bit holder, 3 x bits, 1 x oil bottle • Transport case	7906100718	4046664041962

COMPRESSOR AIR TOOLS

	Description	Article number	Barcode
6" compressed air eccentric sander	**For grinding a wide variety of materials, whether flat or curved surfaces** • Max air pressure: 6.3 bar • 10000 rpm at top speed • Average air consumption: 93.4 L/min • Suitable for 150 mm diameter abrasive discs • Tough reinforced housing for increased durability • Contents includes: 1 x abrasive disc Ø 150 mm, 5 x abrasive discs Ø 150 mm (C: 60, 80, 100, 120, 150), 1 x oil bottle	7906100719	4046664041979

	Description	Article number	Barcode
Compressed air sandblasting gun	**Excellent for removing rust or paint even in hard-to-reach areas** • Working pressure: 3 – 4 bar • Air consumption: 113 L/min • Recycling bag automatically collects used abrasive • Delivery contents: 4 x nozzles - surface, spot, outer edge and inner edge, 1 x abrasive medium 0.5 kg and 1 x collection bag	7906100720	4046664041986

	Description	Article number	Barcode
Compressed air stapler Scheppach Druckluft-Tacker-Set Einstiegsklasse Heimwerker Praxis 4/2018 1,4 Preis/Leistung: sehr gut	**A lightweight, high-performance and easy to use compressed air nail and stapler gun, perfect for a wide range of applications** • Nailer capacity: 15 – 50 mm, 18-gauge brad nails • Staples capacity: 16 – 40 mm • Air consumption per shoot: 1.5 L • Easy-to-use – 360° adjustable exhaust port • Kit includes: 1000 x brad nails, 1000 x staples, hex wrench, safety goggles and oil • Transport case	7906100715	4046664041931

	Description	Article number	Barcode
Assortment of staples and nails	**Suitable for Scheppach Air nail gun** • Nails: 2000 x 25 x 2 mm / 2000 x 40 x 2 mm • Staples: 1200 x 16 x 5.8 mm / 1200 x 16 x 5.8 mm	7906100739	4014915231196

	Description	Article number	Barcode
Compressed air accessory set	**Five of the most popular compressed air tools for the home, DIY and workshop** • Spray and cleaning gun with steel container – for cleaning and degreasing tools and equipment • Tyre inflation gauge - with rubber pressure gauge in bar/psi, and air release valve • Blow gun - for cleaning and drying surfaces • 5 m coiled hose	3906101704	4046664005568

	Description	Article number	Barcode
Compressed air accessory set	**Three popular accessories to suit any air compressor** • Tyre inflator – with rubber gauge protector, dual scale (bar/psi) gauge and air release valve • 5 metre air coiled hose – for easy connection • 3 inflating nozzles	7906100724	4046664042020

	Description	Article number	Barcode
Compressed air accessory set	**Perfect for the do-it-yourselfer, right up to the professional. Five of the most popular workshop tools for use with DIY and hobby air compressors & nozzles** • Gravity fed spray gun – for most spray painting applications • Air wash gun with steel container – for cleaning and degreasing • Tyre inflation gauge – with rubber protector gauge in bar/psi, and air release valve • Air blow gun – for cleaning and drying • 5-metre coiled hose – for easy connection • 3 inflating nozzles	7906100723	4046664042013

	Description	Article number	Barcode
Compressed air accessory set	**Universal accessory set: Blow out, fill tyres, pressure test and compressed air connection** • Tyre inflation gauge – with rubber protector gauge in bar/psi, and air release valve • Air blow gun – for cleaning and drying surfaces and equipment • 11 x different accessories (hose, nozzles, etc.)	7906100710	4046664040125

	Description	Article number	Barcode
Tire inflating gun with digital gauge	**Tyre inflation meter with digital pressure gauge and changeable pressure units** • Rubberised pressure gauge with digital display • Changeable pressure units: bar, MPa, kg/cm2, PSI • Pressure can be read easily thanks to the digital display • East to operate, convenient to handle	7906100736	4046664073758

AERO$_2$SPADE

5 IN 1

- ✓ Pointed chisel
- ✓ Flat chisel
- ✓ Wide chisel
- ✓ Scraper
- ✓ Spade

Advantages

AERO$_2$ SPADE

- **Minimum worker fatigue**
- **Maximum output compared to hand digging**
- **Multiple garden and site operations**
- **High efficiency low consumption compressor. Air required is only 160 litres per minute (2 HP compressor)**

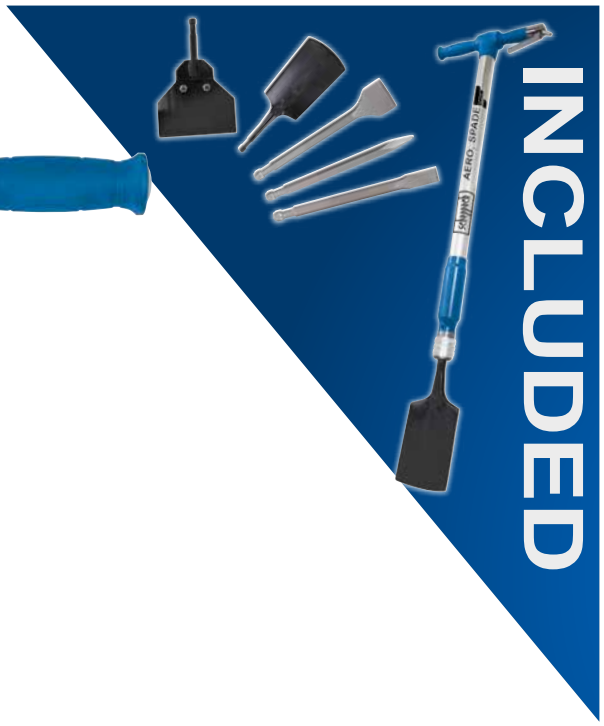

POINTED CHISEL
Is used primarily on concrete. Having a sharp tip rather than a sharp edge means that this chisel is better suited to cutting through concrete.

FLAT CHISEL (1")
A flat chisel may sometimes be used in order to outline any channels.

WIDE CHISEL (2")
Demolition tool for stripping away plaster, tiles, renders and mortar from walls.

FLAT SCRAPER BLADE
Ideal for removal of paint, printing ink, impacted soil, linoleum, adhesive compounds.

SPADE (FORGED)
Is particularly useful for severing roots and excavations or when working in areas containing services or tree roots. The spade is manufactured in forged steel.

COMPRESSED AIR UNIVERSAL TOOL

- Thanks to the compact design, areas that are difficult to access can also be processed
- Non-tiring working thanks to the higher throughput
- 5 different tools for wide range of use
- Robust spade blade made of steel
- Practical system for quick and easy tool changes
- Anti-vibration rubber handle
- 6.3 bar operating pressure

selbst ist der Mann
Das Do-it-yourself-Magazin
SELBST AUSPROBIERT
RESULT: TTTTT
Rated as "VERY GOOD"
Edition 10/2018
www.selbst.de

PLUS X AWARD
2018 ausgezeichnet für:
Innovation
High Quality
Bedienkomfort
Funktionalität

Scheppach Aero2spade
Oberklasse
Heimwerker Praxis 4/2018
1,4
Preis/Leistung: gut – sehr gut

Scheppach Aero2spade
Alles für den Garten
BestOF HEIMWERKER PRAXIS 2019
1,4
Preis/Leistung: gut – sehr gut

SPECIFICATIONS

Dimensions L x W x H	820 x 360 x 75 mm
Operating pressure max.	6.3 bar
Intake capacity max.	280 L/min

LOGISTICAL DATA

Weight net / gross	9.6 / 11 kg
Packaging dimensions	835 x 375 x 70 mm
Article number	5909601900
Barcode	4046664064299
20 Container	900 pcs
40 Container	1800 pcs
40 HQ Container	1800 pcs

COMPRESSOR RECOMMENDATIONS

24 L compressor	Minor excavation work
50 L compressor	Medium heavy excavation work, removal of roots
100 L compressor	Heavy excavation work, breaking work

WSE1000

360°

OPTIONAL ACCESSORIES

WELDING ELECTRODES KIT
25 pieces

Article number: 7906619701
Barcode: 4014915228059

3 IN 1

- ✓ Hot start
- ✓ Antisticking
- ✓ Arc force

INCLUDED

OPTIONAL ACCESSORIES

AUTOMATIC WELDING SHIELD

AWH380
The auto darkening helmet AWH380 by scheppach is ideal for safe hand-free welding. The built-in sensor instantly detects the increase of light and sparks and automatically dims glass within milliseconds for uninterrupted operation.

Article number: 7906602701
Barcode: 4046664073680

SPECIFICATIONS

Dimensions L x W x H	280 x 120 x 200 mm
Suitable electrode size	1.6 – 3.2 mm
Welding current	10 – 130 A
No-load voltage	85 V
Motor	230 V~ / 50 Hz

LOGISTICAL DATA

Weight net / gross	5.2 / 6 kg
Packaging dimensions	380 x 175 x 240 mm
Article number	5906602903
Barcode	4046664073710
20 Container	980 pcs
40 Container	2030 pcs
40 HQ Container	2610 pcs

130 A INVERTER WELDING MACHINE

- **Innovative inverter technology for longer duty cycle, ultra-compact size and smoothest welding**
- Max. 130 A welding current
- **Easy, homogeneous bonding of alloy and non-alloy steels, stainless steel and cast iron**
- **The arc force function** monitors the welding current and the welding voltage to ensure an even performance at all times.
- **The increased striking voltage with hot start function** ensures a stable arc in seconds.
- Effective protection against overheating is provided by a thermostatic cut out with warning lamp
- Long work sessions are also possible thanks to a fan cooling system
- **Includes electrodes, chipping hammer with wire brush, welding shield and shoulder harness**

WSE1100

360°

OPTIONAL ACCESSORIES

WELDING ELECTRODES KIT
25 pieces

2x 25 Stück

Article number: 7906619701
Barcode: 4014915228059

3 IN 1

- ✓ Hot start
- ✓ Antisticking
- ✓ Arc force

OPTIONAL ACCESSORIES

AUTOMATIC WELDING SHIELD

AWH380
The auto darkening helmet AWH380 by scheppach is ideal for safe hand-free welding. The built-in sensor instantly detects the increase of light and sparks and automatically dims glass within milliseconds for uninterrupted operation.

Article number: 7906602701
Barcode: 4046664073680

SPECIFICATIONS

Dimensions L x W x H	330 x 145 x 215 mm
Suitable electrode size	1,6 – 4,0 mm
Welding current	160 A
No-load voltage	85 V
Motor	230 V~ / 50/60 Hz

LOGISTICAL DATA

Weight net / gross	6,6 / 7,6 kg
Packaging dimensions	385 x 225 x 240 mm
Article number	5906603903
Barcode	4046664073727
20 Container	960 pcs
40 Container	2000 pcs
40 HQ Container	2250 pcs

160 A INVERTER WELDING MACHINE

- **Innovative inverter technology for longer duty cycle, ultra-compact size and smoothest welding**
- Max. 130 A welding current
- **Easy, homogeneous bonding of alloy and non-alloy steels, stainless steel and cast iron**
- **The arc force function** monitors the welding current and the welding voltage to ensure an even performance at all times.
- **The increased striking voltage with hot start function** ensures a stable arc in seconds.
- Effective protection against overheating is provided by a thermostatic cut out with warning lamp
- Long work sessions are also possible thanks to a fan cooling system
- **Includes electrodes, chipping hammer with wire brush, welding shield and shoulder harness**

WSE3500

SPECIFICATIONS

Dimensions L x W x H	326 x 194 x 157 mm
Flux cored wire size	0.6 – 0.9 mm
Welding current	30 – 90 A
No-load voltage	31 V
Motor	230 V~ / 50 / 60 Hz

LOGISTICAL DATA

Weight net / gross	5 / 6 kg
Packaging dimensions	396 x 246 x 217 mm
Article number	5906607901
Barcode	4046664129608
20 Container	1200 pcs
40 Container	2500 pcs
40 HQ Container	3000 pcs

OPTIONAL ACCESSORIES

AUTOMATIC WELDING SHIELD

AWH380
The auto darkening helmet AWH380 by scheppach is ideal for safe hand-free welding. The built-in sensor instantly detects the increase of light and sparks and automatically dims glass within milliseconds for uninterrupted operation.

Article number: 7906602701
Barcode: 4046664073680

90 A CORED-WIRE WELDING MACHINE

- 230 V cored wire welding machine up to 90 A
- Works without inert gas
- For cored wire 0.6 – 0.9 mm
- Hose assembly 2 m
- Including 3 coils of welding wire, welding mask and slag hammer with wire brush

WSE4000-MULTI

4 IN 1

- ✓ Electrode welding (MMA)
- ✓ Cored wire welding
- ✓ MIG welding
- ✓ TIG welding

Gas cylinder not included

OPTIONAL ACCESSORIES

WELDING ELECTRODES KIT
25 pcs Ø 3.2 mm and
25 pcs Ø 4.0 mm

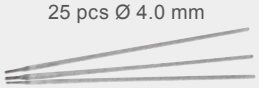

2x 25 pcs

Article number: 7906619701
Barcode: 4014915228059

INCLUDED

OPTIONAL ACCESSORIES

AUTOMATIC WELDING SHIELD

AWH380
Article number: 7906602701
Barcode: 4046664073680

AWH500FL
Article number: 7906617701
Barcode: 4014915225836

AWH500BL
Article number: 7906616701
Barcode: 4014915225843

SPECIFICATIONS

Dimensions L x W x H	370 x 155 x 280 mm
Electrode diameter	0.6 – 0.9 mm
Welding current	30 - 120 A (MIG) 15 - 120 A (MMA and LIFT TIG)
No-load voltage	87 V (MIG and MMA) 13 V (LIFT TIG)
Motor	230 V~ / 50 / 60 Hz

LOGISTICAL DATA

Weight net / gross	6.4 / 8 kg
Packaging dimensions	410 x 200 x 320 mm
Article number	5906608901
Barcode	4046664137610
20 Container	880 pcs
40 Container	1800 pcs
40 HQ Container	2000 pcs

120 A MULTI WELDING MACHINE

- **230 V welding machine for cored wire, MIG (120 A), MMA (70 A) and LIFT TIG (70 A) welding processes**
- **Peak current of 120 A**
- Continuously adjustable current
- **For welding stainless steel, steel and iron**
- Includes 0.45 kg 0.8 mm cored wire coil
- **MIG burner with 2 m hose assembly** (TIG hose assembly optionally available)
- **Space for inert gas cylinder** inside the welding machine
- Pressure regulator with pressure gauge
- **Including two welding nozzles with 0.6 and 0.8 mm (1 pre-assembled), welding mask and slag hammer with wire brush**

WSE5000-MULTI

4 IN 1

- ✓ Electrode welding (MMA)
- ✓ Cored wire welding
- ✓ MIG welding
- ✓ TIG welding

INCLUDED

SPECIFICATIONS

Dimensions L x W x H	430 x 201 x 275 mm
Appropriate electrodes	1.6 - 4 mm
Operating current MIG	30 – 160 A
Operating current MMA	10 – 140 A
Operating current LIFT TIG	10 – 200 A
No-load voltage	87 V (MIG and MMA) 13 V (LIFT TIG)
Mains voltage	230 V~ / 50 Hz

LOGISTICAL DATA

Weight net / gross	6.4 / 9 kg
Packaging dimensions	505 x 280 x 335 mm
Article number	5906609901
Barcode	4046664137535
20 Container	450 pcs
40 Container	980 pcs
40 HQ Container	1120 pcs

200 A DIGITAL MULTI WELDING MACHINE

- **230 V welding machine for cored wire, MIG (160 A), MMA (140 A) and LIFT TIG (200 A) welding processes**
- **For welding stainless steel, steel, iron, and aluminium**
- **Peak current of 200 A**
- **Continuously adjustable** current with digital display for welding current (A) and voltage (V)
- Including cored wire automatic feed
- **MIG burner with 2.5 m hose assembly** (TIG hose assembly optionally available)
- **Including two welding nozzles 0.6 mm and two 0.8 mm, 5 MMA welding electrodes, 2 x 0.2 kg cored wire spools, welding mask and slag hammer with wire brush**

WIG1000-MULTI

2 IN 1

- ✓ Electrode welding (MMA)
- ✓ TIG welding

OPTIONAL ACCESSORY

WELDING ELECTRODES KIT
25 pcs Ø 3.2 mm and
25 pcs Ø 4.0 mm

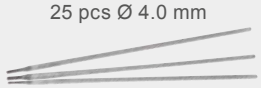

2x 25 pcs

Article number: 7906619701
Barcode: 4014915228059

SPECIFICATIONS

Dimensions L x W x H	360 x 146 x 235 mm
Rod electrode	1.6 – 4.0 mm
Tungsten electrode	1.0 – 4.0 mm
Welding current	15 – 160 A
No-load voltage	93.4 V (MMA) / 13.3 V (TIG)
Motor	230 V~ / 50 / 60 Hz

LOGISTICAL DATA

Weight net / gross	7.6 / 8 kg
Packaging dimensions	421 x 251 x 277 mm
Article number	5906611901
Barcode	4046664151234
20 Container	1000 pcs
40 Container	2000 pcs
40 HQ Container	2200 pcs

OPTIONAL ACCESSORIES

AUTOMATIC WELDING SHIELD

AWH380
Article number: 7906602701
Barcode: 4046664073680

AWH500FL
Article number: 7906617701
Barcode: 4014915225836

AWH500BL
Article number: 7906616701
Barcode: 4014915225843

160 A DIGITAL MULTI WELDING MACHINE

- **Combined unit for TIG & MMA welding**
- TIG inert gas welding for precise welds
- **Suitable for steel and stainless steel**
- MMA welding: universal welding process; popular with DIY enthusiasts because only one power source and the welding electrode are needed, no inert gas
- Welding current can be continuously adjusted from 15 to 160 A
- Compact design and easy to transport, thanks to carrying handle and a weight of only 7.6 kg
- **Delivery contents: TIG hose set 2.5 m, earth cable 2 m**

WIG2000-MULTI

2 IN 1

- ✓ Electrode welding (MMA)
- ✓ TIG welding

OPTIONAL ACCESSORIES

WELDING ELECTRODES KIT
25 pcs Ø 3.2 mm and
25 pcs Ø 4.0 mm

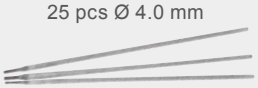

2x 25 pcs

Article number: 7906619701
Barcode: 4014915228059

INCLUDED

OPTIONAL ACCESSORIES

AUTOMATIC WELDING SHIELD

AWH380
Article number: 7906602701
Barcode: 4046664073680

AWH500FL
Article number: 7906617701
Barcode: 4014915225836

AWH500BL
Article number: 7906616701
Barcode: 4014915225843

SPECIFICATIONS

Dimensions L x W x H	360 x 146 x 235 mm
Rod electrode	1.6 – 4.0 mm
Tungsten electrode	1.0 – 4.0 mm
Welding current	15 – 200 A
No-load voltage	95.5 V (MMA) / 13.2 V (TIG)
Motor	230 V~ / 50 / 60 Hz

LOGISTICAL DATA

Weight net / gross	7.8 / 8.2 kg
Packaging dimensions	421 x 251 x 277 mm
Article number	5906612901
Barcode	4046664151227
20 Container	1000 pcs
40 Container	2000 pcs
40 HQ Container	2200 pcs

200 A DIGITAL MULTI WELDING MACHINE

- **Combined unit for TIG welding, 200 A, and MMA shielded metal arc welding**
- **TIG inert gas welding for precise welds and practically all metals such as steel and stainless steel**
- MMA welding: universal welding process; popular with DIY enthusiasts because only one power source and the welding electrode are needed, no inert gas
- Welding current can be continuously adjusted from 15 to 200 A
- Compact and easy to transport, thanks to carrying handle and a weight of only 7.8 kg
- **Delivery contents: TIG hose set 2.5 m, earth cable 2 m**

OPTIONAL ACCESSORIES

ACCESSORY SET PLC40

5x Nozzle
5x Electrode
2x Ceramic cap
2x Diffuser

Article number: 7906600706
Barcode: 4014915223887

OPTIONAL ACCESSORIES

ROLLER-HOLDER FOR PLASMA CUTTER

Article number: 7906600724
Barcode: 4014915232483

selbst ist der Mann
Das Do-it-yourself-Magazin
SELBST AUSPROBIERT
FAZIT: TTTTT
Bewertet mit „SEHR GUT"
Ausgabe 12/2020
www.selbst.de

INCLUDED

PLASMA CUTTER

- **Powerful compact device** with robust housing and carrying handle
- For precise and clean through-cutting **operations up to a material thickness of 12 mm**
- **Can be used for straight and circular cutting operations on copper, stainless steel, aluminium, iron, and steel**
- **Freely adjustable cutting current (from 15 to 40 A)**
- High-quality plasma cutting torch with **hose package and exchangeable torch attachments**
- 2 m grounding cable with a strong clamp
- Compressed air hose with quick connecting system
- Compatible with industry-standard compressors
- **Including 3 nozzles, 3 electrodes (1 pre-assembled each) and compressed air hose with quick connecting system**

SPECIFICATIONS

Dimensions L x W x H	375 x 169 x 250 mm
Cutting current	15 – 40 A
Mains connection	230 V~ / 50 Hz
Cutting performance (depending on material)	Copper 1 – 4 mm Stainless steel 1 – 8 mm Aluminium 1 – 8 mm Iron 1 – 10 mm Steel 1 – 12 mm
Working pressure	4 – 4.5 bar

LOGISTICAL DATA

Weight net / gross	6 / 7.4 kg
Packaging dimensions	435 x 272 x 305 mm
Article number	5906605901
Barcode	4046664095446
20 container	600 pcs
40 container	1200 pcs
40 HQ container	1400 pcs

WSE4000-CUT

DIGITAL MULTI WELDING MACHINE WITH PLASMA CUTTER

- **3-in-1 combined unit - TIG & MMA welding possible up to 160 A, plasma cutting up to 40 A**
- Welding of practically **all metals such as steel and stainless steel or aluminium**
- **Cutting current (CUT) can be continuously adjusted from 15 A to 40 A**
- **Separation cuts possible up to 12 mm with CUT function**
- Compact and lightweight – only 7.7 kg and equipped with a convenient carrying handle
- **Delivery contents: Plasma hose set 4 m, TIG hose set 4 m, electrode mounting 2 m, earth cable 2 m**

SUITABLE FOR

- ✓ Steel
- ✓ Stainless steel
- ✓ Aluminium
- ✓ Iron
- ✓ Copper

3 IN 1

- ✓ Electrode welding (MMA)
- ✓ TIG welding
- ✓ Plasma cutting

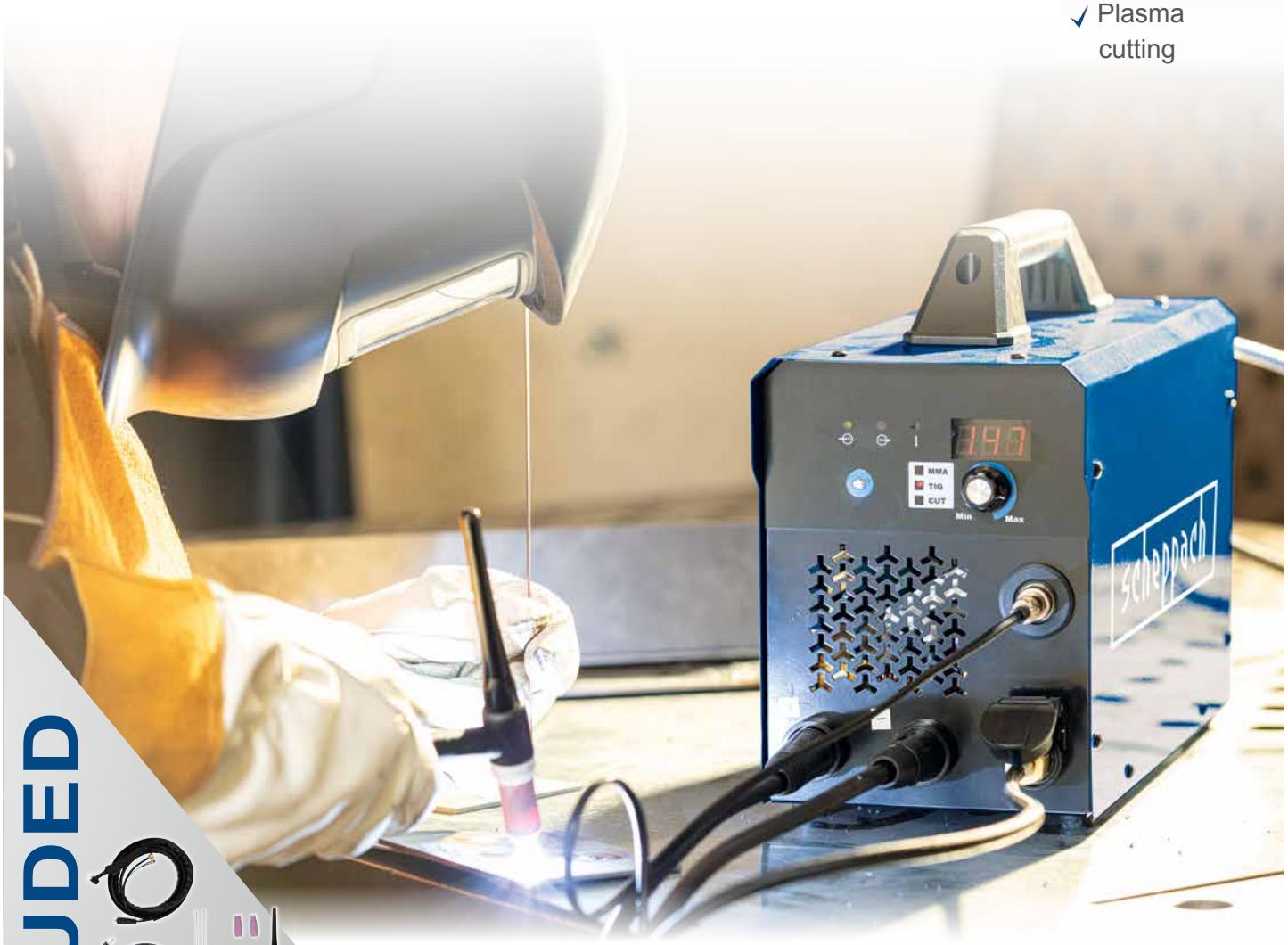

SPECIFICATIONS

Dimensions L x W x H	460 x 165 x 290 mm
MMA	Ø 1.6 – 4.0 mm
TIG	Ø 1.0 – 2.0 mm
Welding current	20 – 160 A MMA/TIG 15 – 40 A Plasma cutter
Motor	230 V~ / 50 / 60 Hz

LOGISTICAL DATA

Weight net / gross	7.7 / 14 kg
Packaging dimensions	530 x 285 x 325 mm
Article number	5906610901
Barcode	4046664151210
20 Container	600 Stück
40 Container	1200 Stück
40 HQ Container	1400 Stück

ELECTRODE WELDING

TIG WELDING

PLASA CUTTING

SUITABLE FOR

- Steel ✓
- Stainless steel ✓
- Aluminium ✓
- Iron ✓
- Copper ✓

Peak current of 160 A

Continuously adjustable current

OPTIONAL ACCESSORIES

WELDING ELECTRODES KIT
25 pcs Ø 3.2 mm and
25 pcs Ø 4.0 mm

2x 25 pcs

Article number: 7906619701
Barcode: 4014915228059

HW2500

2500 KG PALLET TRUCK

- Drawbar made of **extra-robust steel with 3-way function lever**
- **Coated wheels** for an extra-smooth running
- **Extra-fine lifting adjustment** thanks to precise hydraulics
- Reliable, maintenance-free hydraulic controller
- **Robust industrial steel design**
- **Capable of transporting up to 2500 kg**

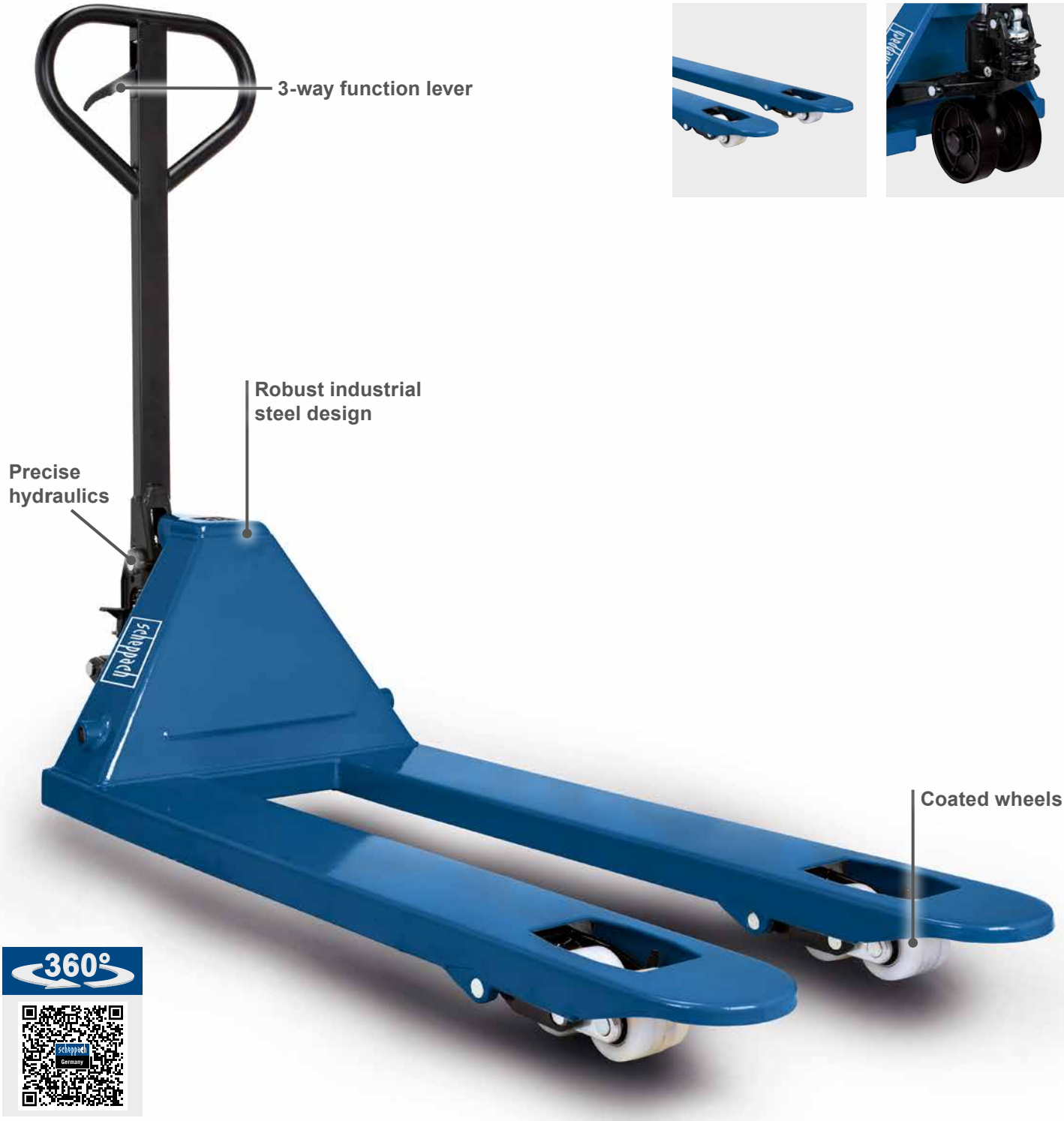

360°

LOGISTICAL DATA

Weight net / gross	62 / 62.5 kg
Article number	5912701900
Barcode	4046664083085
20 Container	180 pcs
40 Container	360 pcs
40 HQ Container	360 pcs

SPECIFICATIONS

Dimensions L x W x H	1550 x 550 x 1200 mm
Load capacity	2500 kg
Fork length	1150 mm
Load rollers Ø	80 mm
Swivel wheels Ø	180 mm

94-PCS TOOL KIT

- Stable and compact tool kit
- **94 tool pieces stowed securely and to hand**
- High power **transmission**
- **Nuts or Allen screws can be loosened easily**
- Nuts or Allen screws will **not be over-tightened**
- **Easy to work** in locations that are difficult to access thanks to extensions and a hinged attachment

1x Bit adapter
15x Bits
17x Bit sockets
1x Bit holder
2x Spark plug sockets
12x Socket wrench, long

1x Flexible extension
4x Hex key
1x Drive
2x Ratchet handle
3x Extensions
2x T-handles
2x Cardan joint
2x Socket spanner

94 pieces

LOGISTICAL DATA

Weight net / gross	4 / 6.5 kg
Packaging dimensions	382 x 80 x 279 mm
Article number	5909308900
Barcode	4046664123798
20 Container	2565 pcs
40 Container	3207 pcs
40 HQ Container	3207 pcs

SPECIFICATIONS

Dimensions L x W x H	373 x 70 x 272 mm
Tool set	94 pcs
Feature	Various tools made of chrome vanadium
Usage	Indoors and outdoors

TB150

101-PCS TOOL KIT

- **Robust and compact metal case** of approx. 46 x 15 x 32 cm
- **101 piece tool set** for household use
- **Well organised and neatly** arranged tools
- Includes among others 1 reversible ratchet with various attachments, 1 water pump pliers, universal pliers, side cutter, utility knife, hammer, handsaw, all-purpose scissors, voltage tester, tape measure delete and several combination spanners, screwdrivers, hex keys and bits in different sizes

Toolbox sets
Scheppach Toolbox TB150
WORLD TOOL AWARDS
WINNER
PREMIUM
2022

Scheppach TB150
Einstiegsklasse 1,3
Heimwerker Praxis 6/21
Preis/Leistung: gut – sehr gut

Best Of 2022
Heimwerker Praxis 1/22
Scheppach Werkzeugkoffer TB150
Kategorie: Handwerkzeug

217 high quality tool pieces

Werkzeuge aus Chrom-Vanadium-Stahl

Aluminium case

PRODUCT DATA

Dimensions L x W x H	460 x 151 x 320 mm
Tool set	101 pcs
Made of chrome vanadium	Combination spanners, bits, hex keys, wobble extension,universal joints, reversible ratchet
Feature	Bit box inside the case
Usage	Indoors and outdoors

LOGISTICAL DATA

Weight net / gross	8.5 / 9 kg
Packaging dimensions	480 x 180 x 370 mm
Article number	5909306900
Barcode	4046664107477
20 Container	942 pcs
40 Container	1884 pcs
40 HQ Container	2167 pcs

39x Sockets
18x Deep sockets
14x E-sockets
3x Spark plug sockets
3x Universal joint
1x Sliding T head bar
3x Adapter
12x Wrench
7x Hex key
1x BMC box

5x Extensionbars
3x Ratchet handle
1x Spinner handle
1x Screwdriver handle
59x Bit sockets
74x Bits
7x Bit holder
3x Reversible ratchet

217-PCS TOOL KIT

- Stable and compact tool kit
- **217 high quality tool pieces made of CrV steel and tool steel**
- All pieces stowed securely and to hand
- **High power transmission** and therefore, **nuts or Allen screws can be loosened easily**
- No over-tightening
- **Can also be used in locations that are difficult to access thanks to various sizes and attachments**

217 pieces

LOGISTICAL DATA

Weight net / gross	10 / 10.3 kg
Packaging dimensions	452.5 x 344 x 96 mm
Article number	5909307900
Barcode	4046664120155
20 Container	1454 pcs
40 Container	1818 pcs
40 HQ Container	1818 pcs

SPECIFICATIONS

Dimensions L x W x H	446 x 342 x 96 mm
Tool set	217 pcs
Feature	Various tools made of chrome vanadium
Usage	Indoors and outdoors

TW1000

263-PCS WORKSHOP TROLLEY

- **7 large and easy-pull tool drawers**
- **Large shelf** on the roller cabinet
- **Punch-outs for extra tool storage**
- **Large and easy-moving wheels and castors, with integrated brake**
- **Can be loaded up to 450 kg**
- **Lockable**
- Handle with **soft grip for comfortable transport**
- **Includes 263-piece tool set**

LOGISTICAL DATA

Weight net / gross	66 / 68 kg
Packaging dimensions	780 x 500 x 870 mm
Article number	5909304900
Barcode	4046664071402
40 HQ Container	207 pcs

SPECIFICATIONS

Dimensions L x W x H	770 x 460 x 970 mm
Number of drawers	7
Height of drawers	58 / 128 / 195 mm
Tool set	263 x
Payload max.	450 kg

TW1000

263 PCS

HAMMER
500 g
PLASTIC HAMMER

COMBINATION SPANNERS
12 pcs

6 SCREWDRIVER SLOT
1 x phase tester,
4 x 100, 5 x 100,
3 x 75, 6 x 150, 6 x 38,
8 x 200

4 CIRCLIP PLIERS
2 for inner rings
2 for outer rings

3 PLIERS
1 pointed pliers
1 side cutting
1 combination pliers

17 PIECE SOCKET WRENCHES INSERTS
10" – 32"
REVERSIBLE RATCHET
1/2"
UNIVERSAL CONNECTION
1/2"
2X EXTENSION
5" + 10"
SLIDING ADAPTER
1/2"

13X SOCKET WRENCH INSERTS
4" – 14"
REVERSIBLE RATCHET
1/4"
UNIVERSAL CONNECTION
1/4"
2X EXTENSIONS
2" + 4"
SLIDING ADAPTER
1/4"
SCREWDRIVER
1/4"

6-PIECE INSULATED SCREWDRIVERS
(-) 3 x 75, 4 x 100, 5,5 x 125 /
(+) PH0 x 75, PH1 x 100, PH2 x 100
7-PIECE PRECISION SCREWDRIVERS
PHO, PHOO, PH1,
1,4 x 50, 2 x 50, 2,5 x 50, 3 x 50
ALLEN KEY SET
T40, T30, T27, T25, T20, T15, T10, T9

ALLEN KEY
2 x 100 mm, 2,5 x 100 mm,
3 x 100 mm, 4 x 150 mm,
5 x 150 mm, 6 x 150 mm

6 PCS CROSSHEAD SCREWDRIVER
PH1 x 100, PH2 x 100,
PH2 x 150,
PH0 x 75, PH3 x 200, PH2 x 38

CRIMPING TOOL
200 mm, 160 pcs

TW1100

70-PCS WORKSHOP TROLLEY

- **70 piece tool set included**
- Large and **smooth-running rollers**
- Lockable to safely store the tools
- **Maximum load 450 kg**

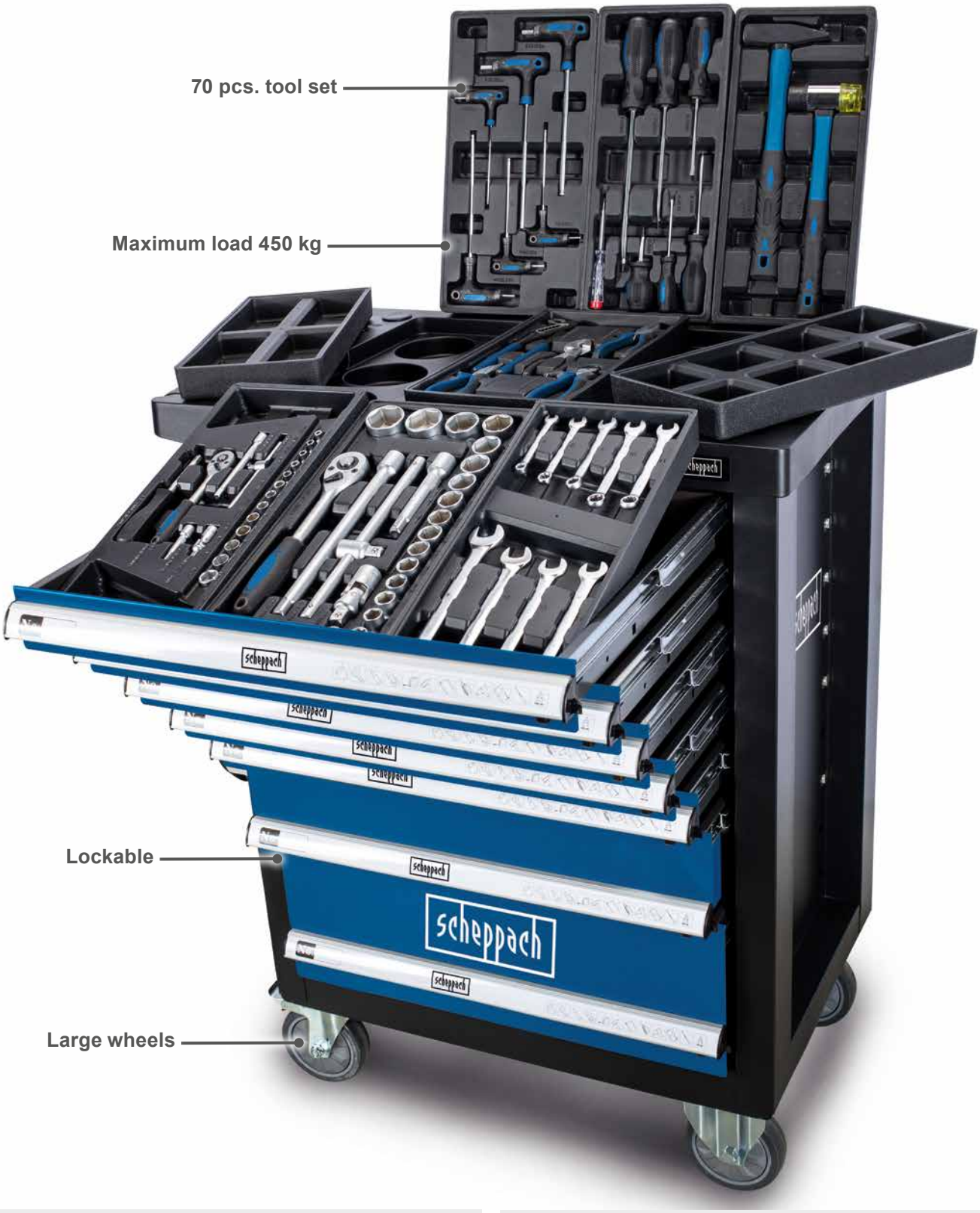

LOGISTICAL DATA

Weight net / gross	58.5 / 62 kg
Packaging dimensions	790 x 490 x 840 mm
Article number	5909304901
Barcode	4046664094920
40 HQ Container	207 pcs

SPECIFICATIONS

Dimensions L x W x H	775 x 470 x 975 mm
Number of drawers	7
Height of drawers	58 / 128 / 195 mm
Tool Set	70 x
Payload max.	450 kg

TW1100

70 PCS

HAMMER
500 g
PLASTIC HAMMER

OPEN-ENDED SPANNER
9 pcs.

6 SCREWDRIVER SLOT
1 x phase tester,
4 x 100, 5 x 100,
3 x 75, 6 x 150, 6 x 38,
8 x 200

4 CIRCLIP PLIERS
2 for inner rings
2 for outer rings
1 x pipe wrench

13X SOCKET WRENCH INSERTS
4 mm – 14 mm
REVERSIBLE RATCHET
1/4"
UNIVERSAL CONNECTION
1/4"
2X EXTENSIONS
2" + 4"
SLIDING ADAPTER
1/4"
SCREWDRIVER
1/4"

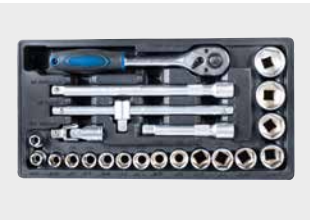

17 PIECE SOCKET WRENCHES INSERTS
10 mm – 32 mm
REVERSIBLE RATCHET
1/2"
UNIVERSAL CONNECTION
1/2"
2X EXTENSION
5" + 10"
SLIDING ADAPTER
1/2"

ALLEN KEY WITH SPHERICAL HEAD
2 x 100 mm, 2,5 x 100 mm,
3 x 100 mm, 4 x 150 mm,
5 x 150 mm, 6 x 150 mm

TW1200

70-PIECE 2-IN-1 WORKSHOP TROLLEY

- Practical **2-in-1 function:** consisting of removable tool box and base cabinet
- Includes **70-piece tool set**
- Smooth-running wheels
- Can be locked so tools are stored safely
- Five large, particularly sturdy and smooth-running drawers
- **Large storage** surface on the workshop trolley
- Perforations on the inner door offering additional installation and storage options
- Handles allowing convenient transportt

LOGISTICAL DATA

Weight net / gross	28.5 / 31.17 kg
Packaging dimensions	550 x 315 x 675 mm
Article number	5909309900
Barcode	4046664173502
40 HQ Container	618 pcs

SPECIFICATIONS

Dimensions L x W x H	525 x 280 x 1045 mm
Number of drawers	5 pcs.
Dimensions base cabinet L x W x H	515 x 280 x 630 mm
Dimensions wall cabinet L x W x H	450 x 240 x 325 mm
Tool Set	70x

TW1200

70 PCS

OPEN-ENDED SPANNER
9 pcs.

13X SOCKET WRENCH INSERTS
4 mm – 14 mm

REVERSIBLE RATCHET
1/4“

UNIVERSAL CONNECTION
1/4“

2X EXTENSIONS
2“ + 4“

SLIDING ADAPTER
1/4“

SCREWDRIVER
1/4“

HAMMER
500 g

PLASTIC HAMMER

ALLEN KEY WITH SPHERICAL HEAD
2 x 100 mm, 2,5 x 100 mm,
3 x 100 mm, 4 x 150 mm,
5 x 150 mm, 6 x 150 mm

6 SCREWDRIVER SLOT
1 x phase tester,
4 x 100, 5 x 100,
3 x 75, 6 x 150, 6 x 38,
8 x 200

4 CIRCLIP PLIERS
2 for inner rings
2 for outer rings
1 x pipe wrench

17 PIECE SOCKET WRENCHES INSERTS
10 mm – 32 mm

REVERSIBLE RATCHET
1/2"

UNIVERSAL CONNECTION
1/2"

2X EXTENSION
5" + 10"

SLIDING ADAPTER
1/2"

Trike-S

Simple and space-saving storage

SPECIFICATIONS

Dimensions L x B x H	593 x 650 x 1000 mm
Sweeping width	650 mm
Waste container	22 L
Cleaning capacity	2000 m²/h

LOGISTICAL DATA

Weight net / gross	5.5 / 6.6 kg
Packaging dimensions	615 x 225 x 608 mm
Article number	5909803900
Barcode	4046664102410
20 Container	351 pcs
40 Container	735 pcs
40 HQ Container	880 pcs

SWEEPER

- **Durable bristles**
- Brushes mounted on both sides for fast results
- **Sweeping system with 3 brushes** for effective cleaning
- Smooth-running wheels for effortless working
- Simple and space-saving storage
- Large **22 L waste hopper** makes frequent emptying unnecessary
- Easy removal and emptying of the waste hopper
- **Large sweeping width of 650 mm**
- Sweeping close to edges - thorough sweeping of corners, nooks and crannies
- Up to **2000 m²/h cleaning capacity**

360°

135 BAR
ELECTRIC HIGH-PRESSURE CLEANER

- Powerful **1600 W motor generates up to 135 bar**
- **Quick-Connect-System,** for quickly changing the accessories
- 7.5 kg weight for stability
- Large wheels for easy transport
- Large work radius with the **5 m high pressure hose**
- Ideal for **mobile applications**
- On-board accessory and hose storage
- Durable owing to reliable high-quality aluminium pump
- **5 m high-pressure hose, cleaning lance with extension, nozzle attachment, standard and high-pressure nozzle, Kärcher adapter, cleaning brush and rotating washing brush as well as an adapter and detergent container are supplied as standard**

SPECIFICATIONS

Dimensions L x W x H	390 x 290 x 435 mm
Pressure max.	135 bar
Rated pressure	90 bar
Flow rate max.	408 L/h
Detergent bottle	0.56 L
Motor	220 – 240 V~
Input	1600 W

LOGISTICAL DATA

Weight net / gross	7,5 / 8,5 kg
Packaging dimensions	385 x 285 x 430 mm
Article number	5907713907
Barcode	4046664142355
20 Container	585 pcs
40 Container	1200 pcs
40 HQ Container	1440 pcs

Optional accessories can be found on page 216

HCE2000

153 BAR
ELECTRIC HIGH-PRESSURE CLEANER

- Powerful **2000 W motor generates up to 135 bar**
- **Quick-Connect-System,** for quickly changing the accessories
- **8 m high-pressure hose** for a wide and convenient range of movement
- **Automatic start/stop**
- **Integrated accessory holder**
- Hose reel with a handwheel for simple and space saving storage of the high-pressure hose
- Durable thanks to high quality, reliable aluminium pump
- Large wheels for easy transport and mobile usage
- **With cleaning lance and extension as standard, variable high-pressure nozzle, turbo nozzle, cleaning needle and detergent container**

LOGISTICAL DATA

Weight net / gross	9.3 / 10.3 kg
Packaging dimensions	440 x 345 x 505 mm
Article number	5907724901
Barcode	4046664136514
20 Container	362 pcs
40 Container	730 pcs
40 HQ Container	850 pcs

SPECIFICATIONS

Dimensions L x W x H	365 x 276 x 820 mm
Pressure max.	153 bar
Rated pressure	102 bar
Flow rate max.	8 L/min
Inlet water pressure max.	4 bar
Detergent bottle	1 L
Motor	230 – 240 V~
Input	2000 W

Optional accessories can be found on page 216

160 BAR
ELECTRIC HIGH-PRESSURE CLEANER

- Powerful **2200 W motor generates up to 160 bar**
- **Quick-Connect-System,** for quickly changing the accessories
- 10 kg weight for stability
- Large wheels for an easy transport
- Large work radius with the **10 m high pressure hose**
- **On-board accessory** and hose storage
- Durable owing to reliable high-quality aluminium pump
- **Surface cleaner, cleaning lance with extension, standard and high-pressure nozzle, Kärcher adpater, cleaning brush as well as an adapter and detergent container are supplied as standard**

360°

INCLUDED

LOGISTICAL DATA

Weight net / gross	10.3 / 12.3 kg
Packaging dimensions	490 x 345 x 505 mm
Article number	5907702905
Barcode	4046664142348
20 Container	313 pcs
40 Container	649 pcs
40 HQ Container	775 pcs

SPECIFICATIONS

Dimensions L x W x H	365 x 276 x 820 mm
Pressure max.	160 bar
Rated pressure	110 bar
Flow rate max.	468 L/h
Inlet water pressure max.	4 bar
Detergent bottle	1 L
Motor	220 – 240 V~
Input	2200 W

Optional accessories can be found on page 216

HCE2400

180 BAR
ELECTRIC HIGH-PRESSURE CLEANER

- Powerful **2400 W motor generates up to 180 bar**
- **Quick-Connect-System,** for quickly changing the accessories
- 9.5 kg weight for a solid stand and easy transport
- Large wheels for an easy transport
- Large work radius with the **5 m high pressure hose**
- Ideal for **mobile applications**
- **On-board accessory** and hose storage
- Durable owing to reliable high-quality aluminium pump
- **5 m high-pressure hose, cleaning lance with extension, nozzle attachment, standard and high-pressure nozzle, cleaning brush and rotating washing brush as well as an adapter and detergent container are supplied as standard**

SPECIFICATIONS

Dimensions L x W x H	365 x 276 x 820 mm
Pressure max.	180 bar
Rated pressure	120 bar
Flow rate max.	408 L/h
Detergent bottle	0,56 L
Motor	230 – 240 V~
Input	2400 W

LOGISTICAL DATA

Weight net / gross	9.5 / 11.3 kg
Packaging dimensions	440 x 345 x 505 mm
Article number	5907705906
Barcode	4046664142331
20 Container	362 pcs
40 Container	730 pcs
40 HQ Container	850 pcs

Optional accessories can be found on page 216

180 BAR
ELECTRIC HIGH-PRESSURE CLEANER

- Powerful **2400 W motor with max. pressure of 180 bar**
- **Quick Connect System** for quick exchange of the attachments
- Its weight of 11 kg guarantees stability - but also easy to transport
- Large wheels for easy transport
- **5 m high-pressure hose** for a wide and convenient range of movement
- Integrated holder for nozzle attachments and high-pressure hose
- Ideal for mobile use
- Durable thanks to high quality, reliable aluminium pump
- **With cleaning lance and extension as standard, standard and high-pressure nozzle, cleaning brush and detergent container**

Integrated holder for nozzle attachments

Large wheels

LOGISTICAL DATA

Weight net / gross	11 / 12 kg
Packaging dimensions	440 x 345 x 505 mm
Article number	59077059942
Barcode	4046664143079
20 Container	362 pcs
40 Container	730 pcs
40 HQ Container	850 pcs

SPECIFICATIONS

Dimensions L x W x H	365 x 276 x 820 mm
Pressure max.	180 bar
Rated pressure	120 bar
Flow rate max.	480 L/h
Max. water temperature	50 °C
Detergent bottle	560 ml
Motor	230 – 240 V~
Input	2400 W

Optional accessories can be found on page 216

HCE1600 / HCE2000 / HCE2200 / HCE2400 / HCE2600

	Article number	Barcode
1 Patio cleaner	5907702701	4046664067160
2 Detergent tank	5907702704	4046664067245
3 Kärcher adapter	5907702706	4046664067269
4 Drain pipe cleaner	5907702709	4046664069072
5 Spray lance	5907705006	4014915221074
6 Spray gun	5907705005	4014915221067
7 Adjustable spray nozzle	5907702012	4014915186557
8 Turbo nozzle	5907702013	4014915186564
9 Nozzle cleaning needle	5907702708	4046664067283
10 90° turbo nozzle	5907702705	4046664067252
11 Extraction hose	7907713708	4014915229346
12 Rotating washing brush	5907702703	4046664067207
13 Cleaning brush	5907702702	4046664067191

16 L WET / DRY VACUUM CLEANER

- Sturdy plastic container with a **capacity of 16 litre**
- Powerful **1200 W motor with 20 kPa suction capacity**
- **Four castors** and a handle for easy transport
- Large working radius thanks to **3 m cable and 1.8 m suction hose**
- 3-piece plastic tube with Ø 32 mm facilitates the space-saving storage
- Integrated **cable bracket**
- **Blow function for blowing out areas** that are awkward to access
- **Including dirt collection bag and foam filter for wet vacuuming**
- **Including crevice nozzle and large combination nozzle for carpet and smooth floors**

3 IN 1

- ✓ Wet vacuuming
- ✓ Dry vacuuming
- ✓ Blow-out function

INCLUDED

LOGISTICAL DATA

Weight net / gross	3.5 / 5 kg
Packaging dimensions	325 x 325 x 395 mm
Article number	5907722901
Barcode	4046664113867
20 Container	690 pcs
40 Container	1444 pcs
40 HQ Container	1616 pcs

SPECIFICATIONS

Dimensions L x W x H	320 x 340 x 405 mm
Max vacuum pressure	20 kPa
Container volume	16 L
Cable length	3 m
Hose length	1.80 m
Motor	220 – 240 V~ / 50/60 Hz
Input	1200 W

Optional accessories can be found on page 223

NTS20

3 IN 1

- ✓ Wet vacuuming
- ✓ Dry vacuuming
- ✓ Blow-out function

20 L WET / DRY VACUUM CLEANER

- **Rust-proof 20 L stainless steel container**
- Powerful **1200 W motor with 20 kPa vacuum capacity**
- Four castors for easy transport
- **Large working radius of 6 m**
- **2 m vacuum hose with 3-part plastic pipe, 38mm Ø**
- Integrated cable and accessory bracket
- **Blow function for blowing out areas** that are awkward to access
- **Including dirt collection bag and foam filter** for wet vacuuming
- **Including crevice nozzle and large combination nozzle** for carpet and smooth floors

LOGISTICAL DATA

Weight net / gross	4 / 6 kg
Packaging dimensions	350 x 350 x 430 mm
Article number	5907721901
Barcode	4046664095071
20 Container	516 pcs
40 Container	1072 pcs
40 HQ Container	1250 pcs

SPECIFICATIONS

Dimensions L x W x H	345 x 345 x 465 mm
Max Vacuum Pressure	20 kpa
Container volume	20 L
Cable length	4 m
Hose length	2 m
Motor	220 – 240 V~ / 50/60 Hz
Input	1200 W

Optional accessories can be found on page 223

NTS30Premium

ELECTRIC

3 IN 1

- ✓ Wet vacuuming
- ✓ Dry vacuuming
- ✓ Blow-out function

30 L WET / DRY VACUUM CLEANER

- **Rust-proof 30 L stainless steel container**
- **Powerful 1300 W motor with 20 kPa vacuum capacity**
- Four castors for easy transport
- **Large working radius of 7 m**
- **3 m vacuum hose with telescopic metal tube, 38 mm Ø**
- Integrated cable and accessory bracket
- Integrated 2000 W switch power socket
- **Blow function for blowing out areas** that are awkward to access
- **Including dirt collection bag and foam filter** for wet vacuuming
- **Including crevice nozzle and large combination nozzle** for carpet and smooth floors

SPECIFICATIONS

Dimensions L x W x H	490 x 490 x 600 mm
Max Vacuum Pressure	20 kPa
Container volume	30 L
Cable length	4 m
Hose length	3 m
Motor	220 - 240 V~ / 50/60 Hz
Input	1300 W
Total rated input	3300 W

LOGISTICAL DATA

Weight net / gross	5 / 7.5 kg
Packaging dimensions	355 x 355 x 585 mm
Article number	5907720901
Barcode	4046664095088
20 Container	384 pcs
40 Container	816 pcs
40 HQ Container	852 pcs

Optional accessories can be found on page 223

SprayVac20

5IN1

- ✓ wet vacuum cleaning
- ✓ dry vacuum cleaning
- ✓ spraying
- ✓ filter cleaning
- ✓ air blow function

SPRAY EXTRACTION CLEANER

- **5-in-1 function:** dry vacuum cleaning, wet vacuum cleaning, spraying, air blow function, filter cleaning
- Practical hose for spraying and suction
- Effective drying of cleaned areas
- **Detachable tank for water and detergent with a capacity of 3.5 litres**
- **20 litre waste water tank made of stainless steel**
- **High-performance 1600 W motor**
- Large working radius, thanks to 2 m plastic hose and a cable length of 7.5 m
- **Integrated cable and accessories bracket**
- Foldable handle and 4 smooth-running wheels ensure convenient transport
- **Includes upholstery cleaning brush and carpet cleaning brush**
- **Includes 20 cm flat nozzle, sofa nozzle and wet/dry floor nozzle**
- **Includes 2 plastic tubes with a length of 45 cm each**
- **Includes folded filter, paper filter and foam filter**

SPECIFICATIONS

Dimensions L x W x H	385 x 335 x 480 mm
Container volume	20L
Max Vacuum Pressure	20 kPa
Water/cleaning tank	3.5 L
Kabellänge	7.5 m
Power	1600 W

LOGISTICAL DATA

Weight net / gross	7.8 / 8.6 kg
Packaging dimensions	390 x 340 x 465 mm
Article number	5905701901
Barcode	4046664169277
20 Container	470 pcs
40 Container	955 pcs
40 HQ Container	1129 pcs

Spray function

Easy Switch between spraying and vacuuming

Detergent tank

Optional accessories can be found on page 223

ASP50-ES

50 L WET / DRY VACUUM CLEANER

- Stainless **steel tank with 50 L capacity and Water drain screw**
- Powerful **1400 W motor with 19 kPa suction power**
- **Blow function** for hard-to-reach areas
- With **4 castors and plastic handle** for better mobility
- Integrated 2000 W switch power socket
- Integrated accessories holder for practical storage
- **3 m vacuum hose with telescopic metal tube, 38 mm Ø**
- **Includes large combi nozzle with insert for carpets/smooth floors, 0.45 m drainage hose and crevice nozzle**
- **Included 1 foam filter for wet vacuuming, 1 Hepa filter and 1 paper bag**

360°

3 IN 1

- ✓ Wet vacuum
- ✓ Dry vacuum
- ✓ Blower function

LOGISTICAL DATA

Weight net / gross	10.5 / 13 kg
Packaging dimensions	530 x 465 x 785 mm
Article number	5907710901
Barcode	4046664068648
20 Container	180 pcs
40 Container	440 pcs
40 HQ Container	484 pcs

SPECIFICATIONS

Dimensions L x W x H	580 x 480 x 740 mm
Max vacuum pressure	19 kPa
Vacuum capacity	50 L
Cord length	5 m
Hose length	3 m
Max. connected Powertool Power	2000 W
Motor	220 - 240 V~ / 50/60 Hz
Input	1400 W
Total rated input	3400 W

Optional accessories can be found on page 224

NTS16 / NTS20

	Description	Article number	Barcode
1 Hepa filter		7907709701	4046664070054
2 Foam filter	1 pcs	7907709702	4014915222873
3 Paper bag 20L	5 pcs	7907709703	4014915222880
4 Re-usable cloth filter	1 pcs	7907709704	4014915222897
5 Plastic suction tube	3 pcs	7907709706	4014915222941
6 Telescopic metal hose		7907709711	4014915223047
7 Floor brush		7907709707	4014915223009
8 Crevice nozzle		7907709708	4014915223016
9 Hose	2 m	7907709705	4014915222934

NTS30Premium

	Description	Article number	Barcode
1 Hepa filter		7907709719	4014915223764
2 Foam filter	5 pcs	7907702703	4046664070078
3 Hose	3 m	7907709710	4014915223030
4 Paper bag 30 L	5 pcs	7907709714	4046664090847
5 Re-usable cloth filter	6 pcs	7907702706	4046664070108
6 Re-usable cloth filter	2 pcs	7907702707	4046664070115
7 Re-usable cloth filter	1 pcs	7907702708	4046664070122
8 Telescopic metal hose		7907709711	4014915223047
9 Plastic suction tube	3 pcs	7907709706	4014915222941
10 Crevice nozzle		7907709708	4014915223016
11 Floor brush		7907709707	4014915223009

ASP50-ES

	Description	Article number	Barcode
1 Foam filter	5 pcs	7907702703	4046664070078
2 Re-usable cloth filter	6 pcs	7907702706	4046664070108
3 Re-usable cloth filter	2 pcs	7907702707	4046664070115
4 Re-usable cloth filter	1 pcs	7907702708	4046664070122
5 Hose	3 m	7907702712	4046664071051
6 Floor brush		7907702714	4046664071136
7 Paper bag 50 L	5 pcs	7907702723	4014915224037
8 Hepa filter		7907702716	4046664071150
9 Metal telescopic tube		7907702717	4046664071167
10 Drain pipe		7907702718	4046664071174
11 Crevice nozzle		7907710701	4046664069614
12 Hose	2 m	7907702711	4046664071044

SPRAYVAC20

	Description	Article number	Barcode
1 Folded filter		7905701701	4046664174189
2 Paper bag 20L	5 pcs	7905701702	4046664174196

AVC20

	Description	Article number	Barcode
1 Hepa filter		7906401704	4014915228448
2 Flat nozzle		7906401705	4014915228455

20 L ASH VACUUM CLEANER

- **1200 W ash vacuum cleaner with twin filter system**
- Integrated **filter cleaning function**
- Robust **20 L metal container**
- **150 cm flexible fireproof hose**
- With transport handle and three mountable castors
- Including a round and a **flat aluminium nozzle**

SPECIFICATIONS

Dimensions L x W x H	350 x 344 x 408 mm
Extraction hose diameter	36.5 mm
Hose length	1500 mm
Air power	90 m³/h
Negative pressure	20 kPa
Filter surface	0.13 m²
Capacity	20 L
Engine	220 – 240 V / 50/60 Hz
Engine power	1200 W

LOGISTICAL DATA

Weight net / gross	4.2 / 5 kg
Packaging dimensions	320 x 320 x 390 mm
Article number	5906403901
EAN	4046664124245
20 container	730 pieces
40 container	1547 pieces
40 HQ container	1739 pieces

Optional accessories can be found on page 224

PFS8000

POND PRESSURE FILTER SET

- Compact pond filter with **43 W pump** and **4000 L/h filter performance**
- Max. Pump performance 2500 L/h
- **Suitable for ponds without fish up to 8000 L, with fish up to 4000 L**
- **With contamination level indicator**
- Self-cleaning filter with twist-cleaning function via crank handle
- Integrated 11 W UV-C lamp for disinfecting the water
- Cleaning results visible after a very short time
- Including 10 m cable, 3 m extraction hose and 2 m drain hose

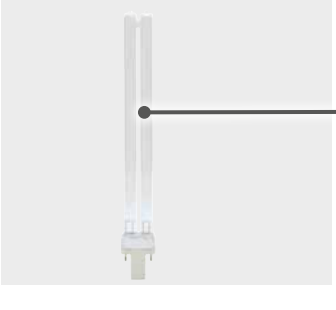

OPTIONAL ACCESSORIES

UV lamp
Article number: 7905800704
Barcode: 4046664168003

Foam filter set
Article number: 7905800705
Barcode: 4046664168010

Filter ball set
Article number: 7905800703
Barcode: 4014915232452

SPECIFICATIONS

Max. delivery height	2 m
Max. filter performanceh	4000 L/h
UV-C cleaning	up to 3000 L/h
Max. pump performance	2.500 L/h
UV-C lamp input power	11 W
Filter tank	9.5 L
Input	43 W

LOGISTICAL DATA

Weight net / gross	8.8 / 9.5 kg
Packaging dimensions	580 x 325 x 550 mm
Article number	5905801901
Barcode	4046664154549
20 Container	535 pcs
40 Container	1076 pcs
40 HQ Container	1300 pcs

POND PRESSURE FILTER SET

- Pond pressure filter set with **75 W pump, 18 W UV-C lamp, 5 m hose for inlet and outlet**
- Removes algae, harmful germs and bacteria
- Clean water within only 14 days
- Suitable for ponds with **up to 20000 litres (without fish) and 10000 litres (with fish)**
- **26 litre tank with a pump capacity of 4000 L/h**
- **Max. suction depth of 2 m**
- **Clogging indicator and integrated cleaning function via hand wheel** without having to open the tank or dismantle the installation

OPTIONAL ACCESSORIES

UV lamp
Article number:
7905800701
Barcode:
4014915232438

Foam filter set
Article number:
7905800702
Barcode:
4014915232445

Filter ball set
Article number:
7905800703
Barcode:
4014915232452

INCLUDED

SPECIFICATIONS

Max. delivery height	3 m
Max. filter performanceh	4000 L/h
Max. pump performance	4000 L/h
UV-C lamp input power	18 W
Filter tank	26 L
Input	75 W

LOGISTICAL DATA

Weight net / gross	10,4 / 12,5 kg
Packaging dimensions	390 x 390 x 680 mm
Article number	5905802917
Barcode	4046664162940
20 Container	265 pcs
40 Container	530 pcs
40 HQ Container	668 pcs

PSFA15

POOL SAND FILTER SYSTEM

- **Multi-way valve with five functions**: filtering, backwashing, rinsing, draining, closing
- Stable filter container with a diameter of 254 mm, quartz sand (Ø 0,45 – 0.55 mm) acts as the filter medium
- **250 watt pump** mounted on a stable base plate
- Connection size 1.5″
- **Suitable for water temperatures of 4 °C up to 43 °C**
- Delivery contents: multi-way valve, locking flange, pressure gauge, filter tank, swimming pool pump, base plate, connection set

SPECIFICATIONS

Max. delivery height	5 m
Max. pump performance	5900 L/h
Effective filter surface	0.05 m²
Filter tank	14 L
Input	250 W

LOGISTICAL DATA

Weight net / gross	7.23 / 8.3 kg
Packaging dimensions	580 x 325 x 550 mm
Article number	5910001901
Barcode	4046664162155
20 Container	530 pcs
40 Container	1080 pcs
40 HQ Container	1220 pcs

POOL SAND FILTER SYSTEM

- **Multi-way valve with five functions:** filtering, backwashing, rinsing, draining, closing
- Stable filter tank with a diameter of 330 mm and 26 litres capacity
- 20 kg silica sand (Ø 0.45-0.55 mm) or 600 g filter balls act as the filter medium
- **Effective filter surface 0.08 m²**
- **550 watt pump** mounted on a stable base plate
- Connection size 1.5″
- **Pump performance 13800 L/h at 550 watts / 220 – 240 V~**
- **Suitable for water temperatures of 4 °C up to 43 °C**
- Delivery contents: multi-way valve, locking flange, pressure gauge, filter tank, swimming pool pump, base plate, connection set

SPECIFICATIONS

Max. delivery height	11 m
Max. pump performance	13800 L/h
Effective filter surface	0.08 m²
Filter tank	26 L
Input	550 W

LOGISTICAL DATA

Weight net / gross	10.1 / 12.1 kg
Packaging dimensions	550 x 355 x 625 mm
Article number	5910002902
Barcode	4046664161943
20 Container	262 pcs
40 Container	537 pcs
40 HQ Container	615 pcs

20 ProS BATTERY + CHARGER

- Quick charger
- Li-Ion batteries with LED display
- No memory effect

STARTER KIT

	Description	Article number	Barcode
Battery & Charger for all 20 V Pro Series	2.0 Ah Li-Ion 220 – 240 V / 50 Hz / 2.4 A	7909205704	4014915222606

BATTERIES

	Description	Article number	Barcode
BA2.0-20ProS for all 20 V Pro Series	2.0 Ah Li-Ion	7909205701	4046664077312
BA3.0-20ProS for all 20 V Pro Series	3.0 Ah Li-Ion	7909209701	4014915222811
BA4.0-20ProS for all 20 V Pro Series	4.0 Ah Li-Ion	7909205703	4046664076315
BA5.0-20ProS for all 20 V Pro Series	5.0 Ah Li-Ion	7909209702	4014915222828

CHARGER

	Description	Article number	Barcode
FC2.4-20ProS for all 20 V Pro Series	220 – 240 V / 50 Hz / 2.4 A	7909205702	4046664076308

MOBILE WORKSHOP CORDLESS IMPACT DRILL SET (2x 2.0 AH LI BATTERIES, FAST CHARGER) WITH PLASTIC CARRY CASE & 206 PCS ACCESSORIES

- Powerful **20 V cordless impact drill CCD45-20ProS**
- Offers a high performance with a maximum torque of 45 Nm for all tasks around house and workshop
- **Idle speed 0-450 rpm** in 1st gear; 0-1600 rpm in 2nd gear
- **16 + 3 torque levels** for optimal adjustment to the respective material
- **With an impact rate of 25,600 strokes per minute**, the cordless impact drill can also handle brick and concrete
- Metal quick-action **drill chuck for tool sizes from 2 - 13 mm**
- **Integrated LED light for excellent view**
- With a see-through lid, the plastic carrier box stores the **206-piece accessories**
- **Accessory set: 20 bits, 16 drills, 8 hexagon socket wrenches, a few screws and dowels and a 5-metre measuring tape**
- **2 x 2.0 Ah lithium power batteries including a quick charger**

selber machen
PRAXISTEST
GUT
scheppach
DTB-20ProS (Set)
Heft 03/22

SPECIFICATIONS

Dimensions L x W x H	390 x 340 x 140 mm
Tool box	206 pcs
Torque	45 Nm
Torque adjustment	16 + 3
Chuck Ø	2 - 13 mm
Idle speed (1st/2nd gear)	0 - 450 / 0 - 1600 min^{-1}
Batteries	2x 20 V DC / 2 Ah Lithium
Power charging unit	220 - 240 V / 50 - 60 Hz

Weight net / gross	4 / 4.5 kg
Packaging dimensions	390 x 340 x 140 mm
Article number	5909222904
Barcode	4046664077213
20 containers	1400 pcs
40 containers	2800 pcs
40 HQ containers	3300 pcs

GOOD
WORKING
since 1927

Our garden catalogue is available on our website:
www.scheppach.com

scheppach
Germany

Scheppach GmbH
Günzburger Str. 69 | D-89335 Ichenhausen | Fon 00 49/82 23/40 02-99 | Fax 00 49/82 23/40 02-153
bestelleingang@scheppach.com | www.scheppach.com